10 Router Set-up Tips

EXCLUSIVE MODULAR FILE CABINETS & MATCHING DESK

Woodsmith®

www.Woodsmith.com

Vol. 24 / No. 144

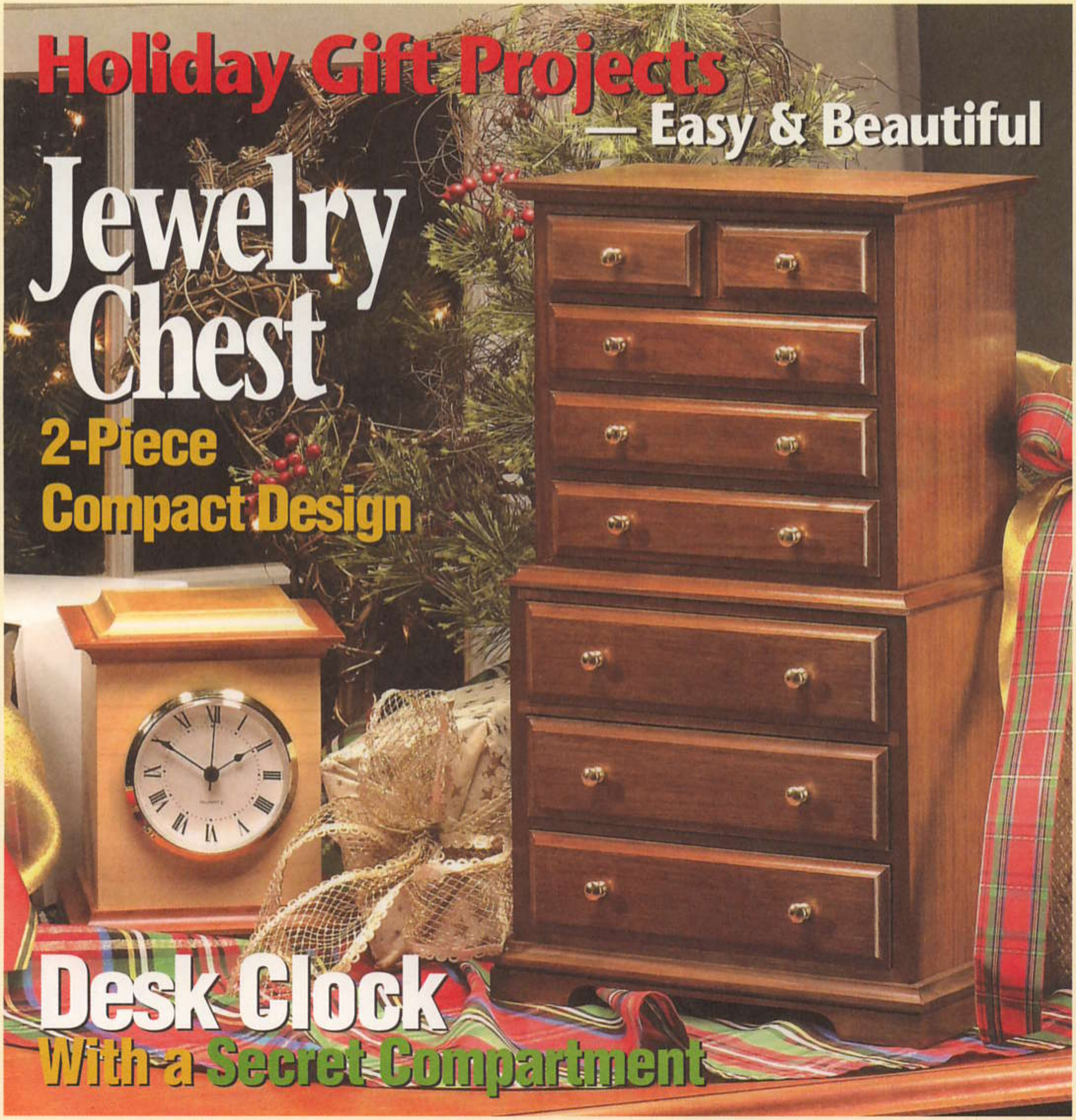

A Publication of August Home Publishing

Woodsmith

No. 144 December, 2002

Publisher Donald B. Peschke
Editor Terry J. Strohman
Senior Editor Jon Garbison
Assistant Editors Ted Raife
Phil Huber
Art Director Todd Lambirth
Senior Illustrators David Kreyling
Dirk Ver Steeg
Harlan V. Clark
Graphic Intern Nathan Robertson

CREATIVE RESOURCES
Creative Director: Ted Kralicek • *Sr. Project Designers:* Ken Munkel, Kent Welsh, Ryan Mimick, Chris Fitch • *Shop Craftsmen:* Steve Curtis, Steve Johnson • *Sr. Photographer:* Crayola England

SPECIAL PUBLICATIONS
Corp. VP: Douglas L. Hicks • *Art Director:* Douglas A. Flint • *Senior Graphic Designer:* Chris Glowacki • *Senior Editor:* Craig Ruegsegger • *Asst. Editor:* Joel A. Hess • *Graphic Designers:* Vu Nguyen, Jonathan Eike • *Edit. Intern:* Cindy Thurmond

CIRCULATION
Subscriber Services Director: Sandy Baum • *New Business Circ. Mgr.:* Wayde Klingbeil • *Multi-media Promotions Manager:* Rick Junkins • *Promotions Analyst:* Patrick Walsh • *Renewal Mgr.:* Paige Rogers • *Billing & Collections Manager:* Rebecca Cunningham • *Circ. Marketing Analysts:* Kris Schlemmer, Paula M. DeMatteis • *Sr. Graphic Designers:* Mark Hayes, Robin Friend

CORPORATE SERVICES
VP of Finance: Mary R. Scheve • *Controller:* Robin K. Hutchinson • *Sr. Account.:* Laura J. Thomas • *Accts. Payable:* Mary J. Schultz • *Accts. Receivable:* Margo Petrus • *Production Dir.:* George Chmielarz • *Electronic Publishing Director:* Douglas M. Lidster • *System Administrator:* Cris Schwanebeck • *PC Maint. Tech.:* Robert D. Cook • *Pre-press Image Specialists:* Troy A. Clark, Minniette Johnson • *New Media Mgr.:* Gordon C. Gaippe • *Web Site Art Dir.:* Gene Pedersen • *Web Server Admin.:* Carol Schoeppler • *Web Content Mgrs.:* David Briggs, Sue M. Moe • *Web Designer:* Kara Blessing • *Professional Development Dir.:* Michal Sigel • *H.R. Asst.:* Kirsten Koele • *Office Manager:* Natalie Lonsdale • *Facilities Manager:* Kurt Johnson • *Receptionist:* Jeanne Johnson • *Mail Room/Delivery:* Lou Webber

WOODSMITH MAIL ORDER
Operations Director: Bob Baker • *Cust. Service Mgr.:* Jennie Enos • *Warehouse Supr.:* Nancy Johnson • *Buyer:* Linda Jones • *Tech. Service Rep.:* Johnny Audette • *Admin. Assist.:* Nancy Downey • *Sr. Cust. Serv. Reps.:* Tammy Truckenbrod, Anna Cox, April Revell, Deborah Rich • *Cust. Serv. Reps.:* Valerie Jo Riley, Kim Harlan • *Warehouse:* Sylvia Carey

WOODSMITH STORE
Mgr.: Dave Larson • *Asst. Manager:* Tim Thelen • *Sales Staff:* Wendell Stone, Larry Morrison, Mark Johnson, Gregory Kauzlarich, Brian McCallum • *Office Mgr.:* Vicki Edwards

Woodsmith® (ISSN 0164-4114) is published bimonthly (Feb., Apr., June, Aug., Oct., Dec.) by August Home Publishing Company, 2200 Grand, Des Moines, IA 50312.
Woodsmith® is a registered trademark of August Home Publishing.

Copyright© 2002 August Home Publishing Company. All rights reserved.

Subscriptions: Single copy: $4.95. One year subscription (6 issues), $24.95. (Canada/International add $10 per year, U.S. funds.)
Periodicals Postage Paid at Des Moines, IA and at additional offices. USPS/Perry-Judd's Heartland Division Automatable Poly.
Postmaster: Send change of address to *Woodsmith*, Box 37112, Boone, IA 50037-2112.
Subscription Questions? Write to *Woodsmith*, P.O. Box 842, Des Moines, IA 50304-9961 or call 1-800-333-5075, 8:00 am to 5:00 pm, Central Time, weekdays. Or send an email to: orders@woodsmith.com
Email: woodsmith@woodsmith.com
World Wide Web: http://www.woodsmith.com

Printed in U.S.A.

AUGUST HOME PUBLISHING COMPANY

SAWDUST

There's a television show I've become hooked on called "Antiques Roadshow." Maybe you've seen it. Each week, the show travels to a different city where folks bring in their furniture and collectables to be appraised by experts. These experts usually provide the history and other background information on the items — as well as the current value. Although it's not a show about woodworking, they often feature interesting pieces of furniture.

A while back, I became intrigued by one of the furniture pieces featured on the program. At first, it looked like a handsome bedroom dresser with several drawers. But as the camera pulled back, I realized this piece of furniture was less than two feet tall.

So what was the dresser used for? A piece of children's furniture? No, it was too small for that. And it was too big to be considered a miniature.

As usual, the appraiser had the answer — it was a salesman's sample. Evidently, many years ago furniture salesmen used scaled-down versions of furniture pieces to show what the full-size pieces would look like. Before the show was over, I had a new *Woodsmith* project to work on — a Jewelry Chest-on-Chest.

As you'd expect, our Chest-on-Chest is based on a full-size design, but it takes up very little space. (The footprint is only about 6" x 10".) Yet its eight drawers still provide plenty of space to keep valuables organized.

Of course, there's more to building a small project than just taking a full-size plan and shrinking it down. Small projects require different solutions than large ones, especially when it comes to minute joinery or "small" assembly problems. So we kept the joinery as simple as possible — just dadoes and rabbets. And we came up with some tips on how to work with the small parts safely and accurately.

NEW FACES. On another note, I'm pleased to announce we have a couple of new assistant editors here at *Woodsmith*: Phil Huber and Ted Raife. Phil has a publishing background and is a devoted woodworker. Ted has been a professional woodworker for over twenty years. I'm looking forward to working with both of them and tapping into their experience and knowledge.

Terry

STATEMENT OF OWNERSHIP, MANAGEMENT, AND CIRCULATION
(Required by 39 U.S.C. 3685)

1. Publication Title: *Woodsmith.* **2.** Publication No.: 0164-4114 **3.** Filing Date: September 24, 2002. **4.** Issue Frequency: Bimonthly. **5.** No. of issues published annually: 6 (six). **6.** Annual subscription price: $24.95. **7.** Complete mailing address of known office of publication: 2200 Grand Avenue, Des Moines, (Polk County), Iowa 50312-5306. **8.** Complete mailing address of the headquarters or general business offices of the publisher: 2200 Grand Avenue, Des Moines, (Polk County), Iowa 50312-5306. **9.** Full names and complete mailing addresses of publisher, editor, and managing editor: Publisher: Donald B. Peschke, 2200 Grand Avenue, Des Moines, Iowa 50312; Editor: Terry J. Strohman, 2200 Grand Avenue, Des Moines, Iowa 50312. **10.** Owner: August Home Publishing Company, 2200 Grand Avenue, Des Moines, Iowa 50312; Donald B. Peschke, 2200 Grand Avenue, Des Moines, Iowa 50312. **11.** Known bondholders, mortgagees, and other security holders owning 1 percent or more of total amount of bonds, mortgages or other securities: None. **12.** (Does not apply.) **13.** Publication Title: Woodsmith. **14.** Issue Date for Circulation Data Below: July/August 2002 **15.** Extent and nature of circulation:

	Average no. copies each issue during preceding 12 months	Average no. copies of single issue published nearest to filing date
A. Total number of copies (net press run)	307,321	306,271
B. Paid and/or requested circulation:		
1. Paid/requested outside-county mail subscriptions stated on Form 3541	249,604	240,324
2. Paid in-county subscriptions	0	0
3. Sales through dealers and carriers, street vendors, counter sales, and other non USPS paid distribution	23,149	22,770
4. Other classes mailed through the USPS	0	0
C. Total paid and/or requested circulation	272,753	263,094
D. Free distribution by mail, samples, complimentary, and other free copies		
1. Outside-county as stated on Form 3541	231	172
2. In-county as stated on Form 3541	0	0
3. Other classes mails through the USPS	0	0
E. Free distribution outside the mail (carriers or other means)	0	0
F. Total free distribution	231	172
G. Total distribution	272,984	263,266
H. Copies not distributed	34,337	28,801
I. Total	307,321	292,067
J. Percentage Paid and/or requested circulation	99.92%	99.93%

16. Publication of Statement of Ownership. Will be printed in the Dec. 2002 (#144) issue of this publication.
17. I certify that all information furnished on this form is true and complete. (signed) Terry J. Strohman, Editor

On occasion, we allow companies whose products and services may be of interest to you to send advertising mail to our subscribers. We are careful to choose ethical companies that have information of genuine interest to our subscribers. Most of our subscribers appreciate these materials. However, if you prefer to have your name deleted from the mailing list made available to other companies, please write to us at Woodsmith, 2200 Grand Avenue, Des Moines, IA 50312

A Look Inside

Contents

Features

Modular File Cabinets 6

Whether you need a little storage or a lot, the modular design of these file cabinets means you can build just what you need (and you can even add additional units later on). Plus, you can customize the look with one of several optional drawer faces.

Home Office Desk 14

Start by building a pair of two-drawer file cabinets, connect them with a top panel and add a shallow pencil drawer. You'll be surprised at how easy it is to build a handsome desk.

Get the Right Combination 18

Sort through the terminology and technology of table saw blades. We'll provide all the "tools" you need to make the best choice when buying your next combination blade.

Desk Clock 20

In spite of its small size, there's a lot of woodworking that goes into making this clock. What's more, there's even a secret compartment. It's a great gift project that you can build in a weekend.

Top 10 Router Set-up Tips 24

Whether the router is hand-held or table-mounted, these straightforward techniques and simple jigs will shorten set-up times and improve the accuracy of your cuts.

Jewelry Chest-on-Chest 28

Even though this elegant jewelry case looks like a full-size chest-on-chest, it's actually sized to sit on top of a dresser. And basic joinery techniques keeps the construction simple.

Departments

Tips & Techniques 4
Shop Notes 16
Sources 35

File Cabinet *page 6*

Desk Clock *page 20*

Jewelry Chest-on-Chest *page 28*

TIPS & TECHNIQUES

Dangling Drawer Stops

The drawer guides used in the Bedside Chest in No. 139 are similar to the ones I have used on several projects in my home.

However, my drawers are larger and heavier. And I needed a way to prevent them from being accidentally pulled all the way out of the cabinet . So I came up with the dangling drawer stop that you can see in Fig. 1.

The stop is simply a piece of hardwood that pivots up into a mortise cut in the drawer runner above it. To make the stop, I began by cutting a mortise in the bottom of the drawer runner for the stop to fit in, as you can see in Fig. 2.

Once the mortise was complete, I cut the stop out of hardwood and rounded the upper corners, as Fig. 2a shows. Then I rounded the front corner to make it easier to flip out of the way when removing the drawer.

The stop pivots on a cut-off nail. To install the stop, simply drill a hole in the runner slightly smaller than the nail so it will fit tight. Then drill a hole in the stop slightly larger than the diameter of the nail so it can dangle freely. Finally I added washers between the stop and the mortise to keep the stop from rubbing.

Jim Shaver
Yukon, Oregon

1
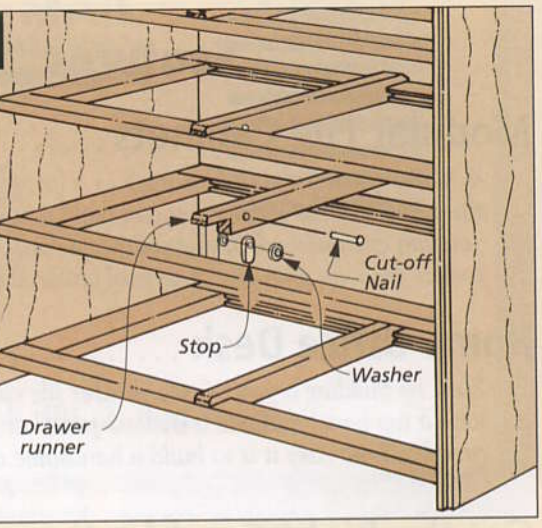

FREE Online Tips

If you'd like even more woodworking tips, the solution is simple. Just visit us at our web site and sign up to receive a free tip via email every week.

www.woodsmith.com

2
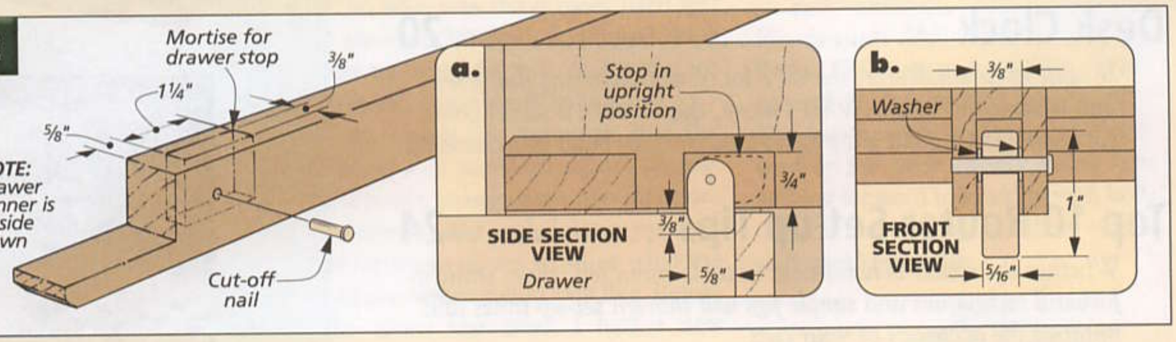

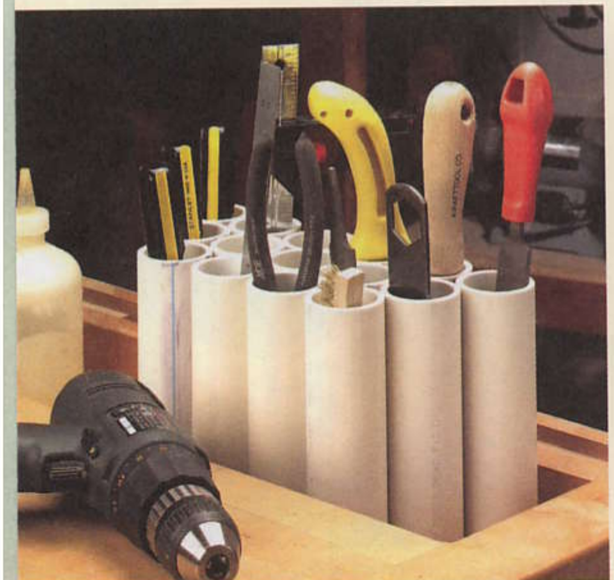

PVC Tool Storage

The workbench in my shop is usually piled with tools. To keep things organized, I built this "honeycomb" of PVC pipe for my most often used hand tools.

For my holder, I used 1½" PVC pipe cut into 7" lengths. After cutting a number of pieces, simply place them against a stop to get a square alignment. Then apply cement along the length of the pipe.

After gluing the first row, I layered another two rows to give me a holder for 15 tools, see photo. The PVC cement sets very quickly and the holder can be used in a matter of a few minutes.

For something so simple, it's a pretty flexible system. You can vary the length of pipe and the diameters depending on the size of your tools. As an added benefit you can increase its storage capacity by simply gluing on more pieces of PVC.

Jim Kilton
Mauldin, South Carolina

Cork Clamping

I glue small squares of cork to the faces of my clamps for gluing up delicate workpieces. The cork protects the wood and still keeps a firm grip on the project.

Dan Lindsey
Girard, Pennsylvania

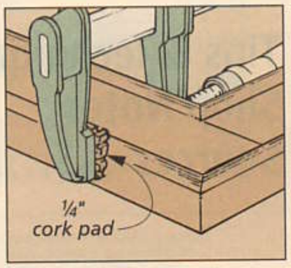

Mess-Free Cleaning

Let's face it, cleaning saw blades is messy. Overspray from the cleaner can leave stains on the floor that are hard to clean up.

To contain the mess, I bought an inexpensive oil drain pan, available at auto parts stores. It has an upper pan that drains into a reservoir, see photo.

Now I can spray on the cleaner and rinse it off. When I'm done, all that's left is to pull the plug to drain the cleaner and water into the reservoir for disposal or recycling.

Ryan Vogt
Urich, Missouri

Saw Blade Storage

Having cut myself on an exposed saw blade recently, I now appreciate the importance of a safety cover.

This inexpensive container is made from a five-gallon bucket cover in just a few minutes.

I secured the blade to the cover using a carriage bolt, washer and wing nut. To do this, drill a ½" hole in the lid and square it up with a utility knife. Then slip the blade over the bolt and tighten it with the washer and wing nut.

Jacques Paquette
Somerset, Massachusetts

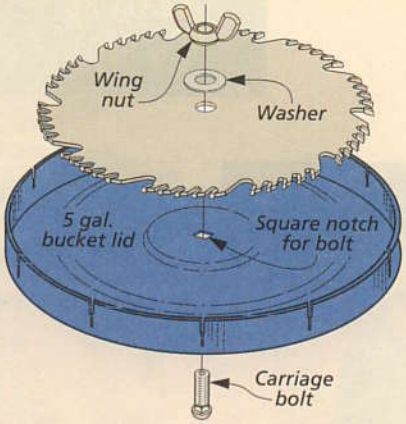

Star Knob Wrench

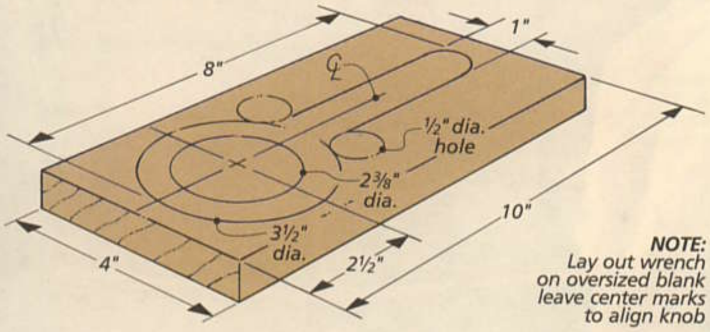

Sometimes I just can't get enough leverage with my hands to tighten the knobs on my router table fence and jigs. Other times the knobs won't break loose.

So I built this star knob wrench to solve both of those problems. I began by laying out the head of the wrench on a piece of ¾"-thick hardwood, as you can see in the illustration at the upper right.

First, draw a 3½"-dia. circle for the head of the wrench. Next, lay out the handle for the wrench. Then, draw a smaller circle that matches the diameter of the star knob. My wrench is designed for five-point knobs, but you could just as easily make one to fit any star knob you have in your shop.

With the head of the wrench laid out, I set the knob on the workpiece and traced its outline, as you can see in Fig. 1.

Once the arms were marked, I used a ⅝"-dia. Forstner bit to drill a recess for the knob arms, making sure the outside of the bit contacted the point where the outline of the knob and the inner circle connects, as in Fig. 2. I drilled each recess to match the thickness of the star knob (about $^{11}/_{16}$").

After the points have been drilled, the center can be cleaned out with a 1⅝" bit, as Fig. 3 shows. All that's left to do is cut out the wrench on the band saw and round off the edges to give it a more comfortable grip.

George Warren
Montgomery, Alabama

SUBMIT YOUR TIPS

If you have an original shop tip, we would like to hear from you and consider publishing your tip in one or more of our publications. Just write down your tip and mail it to: *Woodsmith*, Tips and Techniques, 2200 Grand Avenue, Des Moines, Iowa 50312. Please include your name, address, and daytime phone number in case we have any questions. If you would like, FAX it to us at 515-282-6741 or send us an email message at: woodsmith@woodsmith.com. We will pay up to $200 if we publish your tip.

1

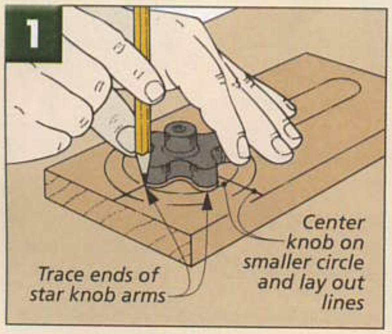

2

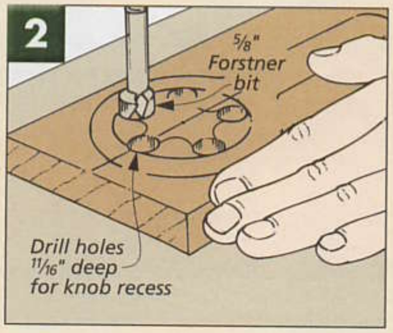

3

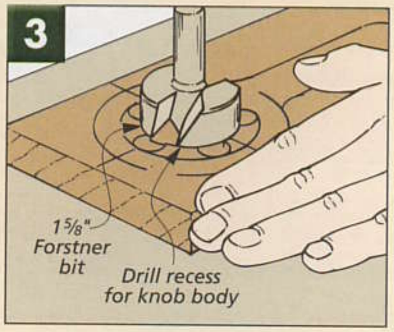

MODULAR FILE CABINETS

This home office solution is straightforward to build and can be adapted easily to meet your storage needs.

These file cabinets are easily one of the most versatile projects I've ever made. Built in single drawer units, they can be put together as a stack of two, three or four. Add a base and a similar cap, and you have a classic-looking file cabinet. Or you can make two stacks of two, connect them with a desk top and a pencil drawer, and you've got a handsome desk. (Desk top plans are shown on page 14.) So you can build just what you need to fit the "office" space you have. Plus, as your storage needs grow, you can easily build another unit and add it to your cabinet.

This modular design has another benefit — you don't have to be a seasoned woodworker or have a large shop to build the project. Since it's modular, you're basically building a number of fairly small plywood boxes. The joinery is simple (tongue and dado construction), and there are no large assemblies to wrestle with. Plus, the units go together (and come apart) quickly and securely with a few machine screws and threaded inserts.

One final note. Since these drawers are large enough to hold a lot of $8\frac{1}{2}$" x 11" hanging file folders, I wanted to make sure they were plenty strong, so they're joined with routed half-blind dovetails and open on heavy-duty slides. But don't worry. You'll have all the information you need to build and install them successfully.

CUTTING DIAGRAM*

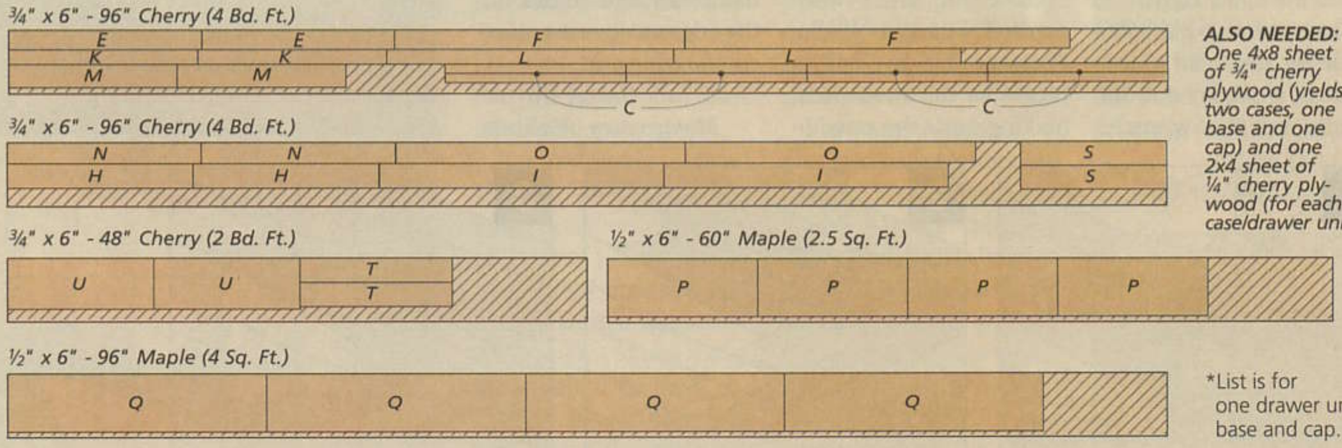

ALSO NEEDED: *One 4x8 sheet of ¾" cherry plywood (yields two cases, one base and one cap) and one 2x4 sheet of ¼" cherry plywood (for each case/drawer unit)*

*List is for one drawer unit, base and cap.

Construction Details

OVERALL DIMENSIONS:
16"W x 24"D x 30"H (Two-Drawer Unit)
16"W x 24"D x 43"H (Three-Drawer Unit)

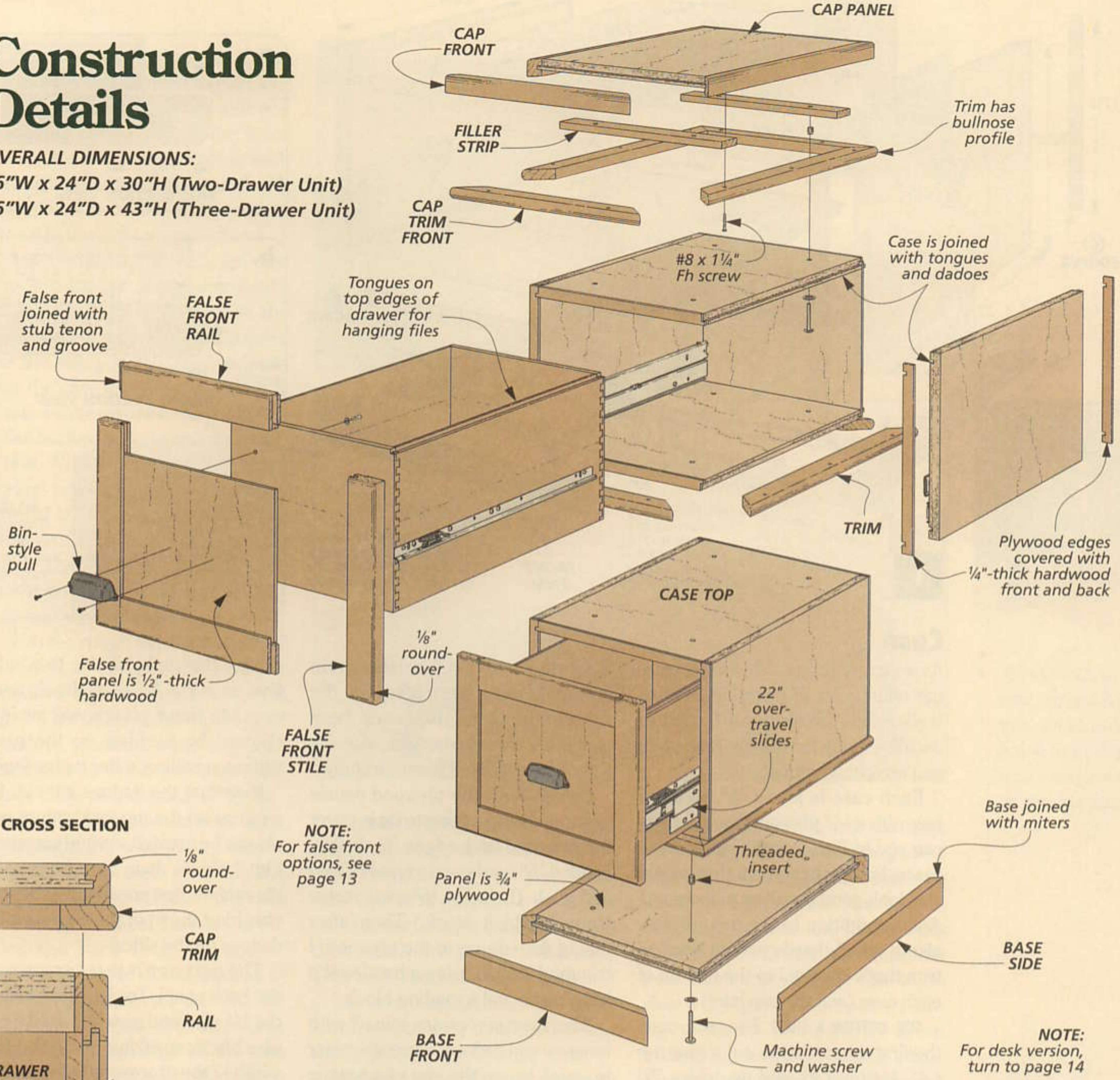

CROSS SECTION

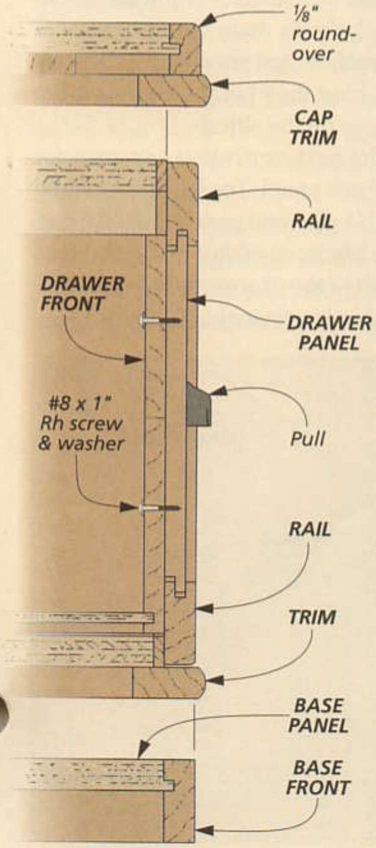

MATERIALS & SUPPLIES*

A	Case Top/Btm. (2)	¾ ply. - 22¼ x 14½	**P**	Drawer Front/Back (2)	½ x 9⅝ - 13
B	Case Sides (2)	¾ ply. - 22¼ x 12¼	**Q**	Drawer Sides (2)	½ x 9⅝ - 21⅝
C	Case Edging (8)	¾ x ¼ - 15 rgh.	**R**	Drawer Bottom (1)	¼ ply. - 12½ x 21½
D	Case Back (1)	¼ ply. - 14½ x 11¼	**S**	False Front Stiles (2)	¾ x 2 - 12⅛
E	Trim Front/Back (2)	¾ x 1¾ - 16	**T**	False Front Rails (2)	¾ x 2 - 12¼
F	Trim Sides (2)	¾ x 1¾ - 24	**U**	False Front Panel (1)	½ x 12 - 8⅝
G	Base Panel (1)	¾ ply. - 14½ x 22½	•	(1 pr.) 22" Over-travel Slides w/Screws	
H	Base Front/Back (2)	¾ x 2 - 15½	•	(8) ¼"-20 Brass Threaded Inserts	
I	Base Sides (2)	¾ x 2 - 23½	•	(8) ¼"-20 x 2" Machine Screws	
J	Cap Panel (1)	¾ ply. - 14½ x 22½	•	(8) ¼" Flat Washers	
K	Cap Front/Back (2)	¾ x 1¼ - 15½	•	(20) #8 x 1¼" Fh Woodscrews	
L	Cap Sides (2)	¾ x 1¼ - 23½	•	(4) #8 x 1" Rh Woodscrews	
M	Cap Filler Strips (2)	½ x 2 - 14	•	(4) #8 Flat Washers	
N	Cap Trim Front/Back (2)	¾ x 1¾ - 16	•	(1) Bin-Style Drawer Pull w/Screws	
O	Cap Trim Sides (2)	¾ x 1¾ - 24			

*List is for one drawer unit, base and cap.

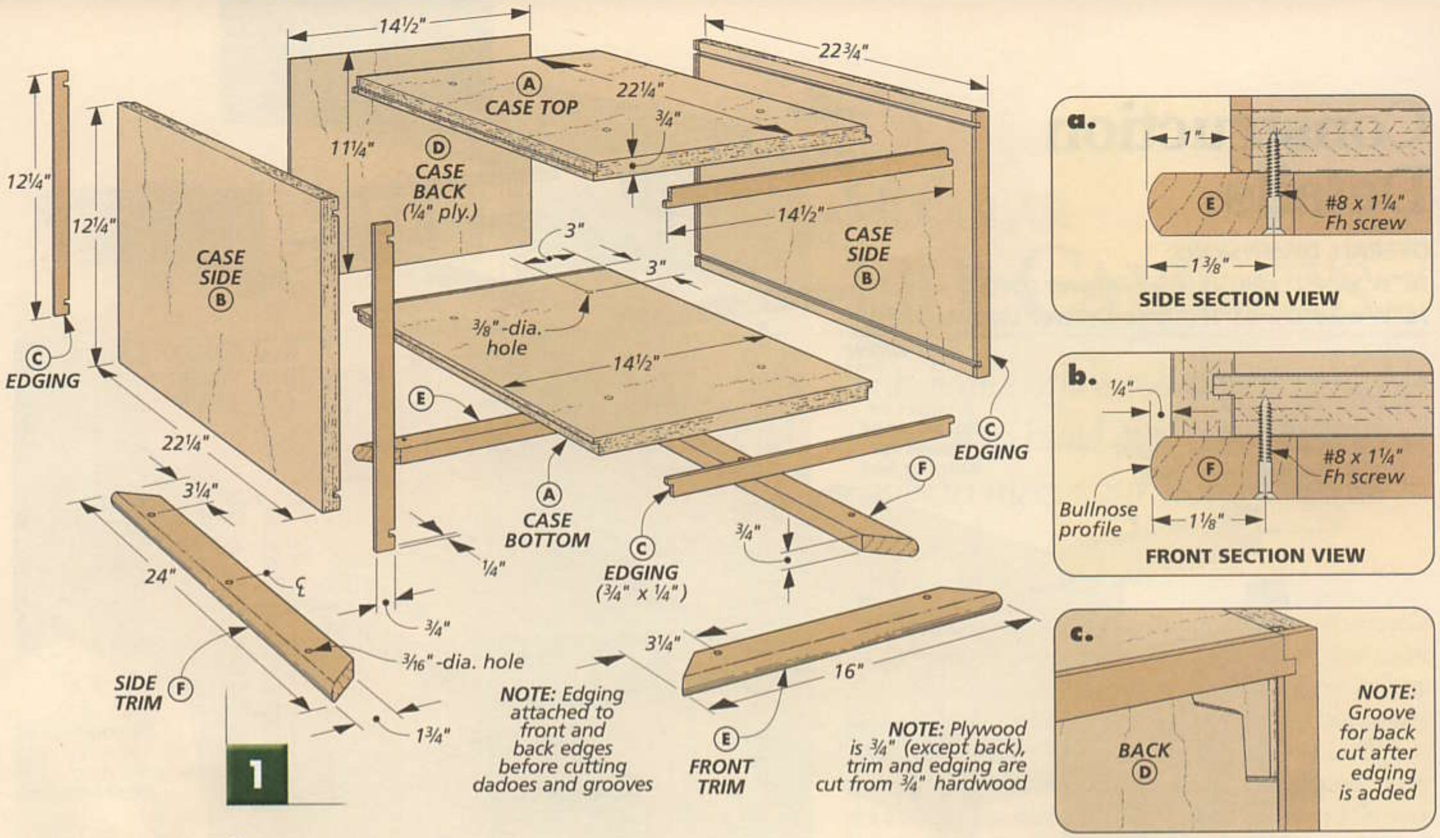

Case

As with any project, this filing cabinet takes a bit of planning. Before buying the materials, you'll want to decide exactly how many case units you are going to build.

Each case is just a ¾" plywood box with a ¼" plywood back, as you can see in Fig. 1 above. (For these cases, I used cherry, but they would also look good in oak or mahogany.) And in addition to the box, there's also a small, hardwood "frame" of trim that's attached to the bottom of each case (and the cap later).

TOP, BOTTOM & SIDES. For each case, the first thing to do is cut a *case top (A)*, *bottom (A)*, and two *sides (B)* to size. All these panels are wider than they are long so the grain direction runs vertically on the sides of the case. Also, since these panels are close to the same size, it's a good idea to label them carefully.

EDGING. With the plywood panels in hand, the first thing to do is cover the front and back edges. To do this, I added ¼" hardwood *edging (C)*, as in Fig. 1. (I ripped ¼"*-wide* strips from ¾"-thick stock.) Then after gluing the edging to the plywood, I trimmed it flush using a hand saw, a hand plane and a sanding block.

The case pieces are joined with tongues and dadoes. Since it's easier to sneak up on the size of a tongue to match a dado, I cut the dadoes across the ends of the two sides first, as in Fig. 2. I used the rip fence to guide these pieces and avoided chipout by backing up the panel with an auxiliary miter gauge fence.

Now that the dadoes are cut, the tongues on the top and bottom panels can be created. As you can see in Fig. 3, this is done by cutting a simple rabbet. Just sneak up on the cut, checking the fit of the tongue in the dadoes on the sides.

The next step is to cut grooves for the back panel. To size these to hold the ¼" plywood panels, I used a regular blade, sneaking up on the final width of the groove, as in Fig. 4. (¼" plywood is closer to 3⁄16" thick.)

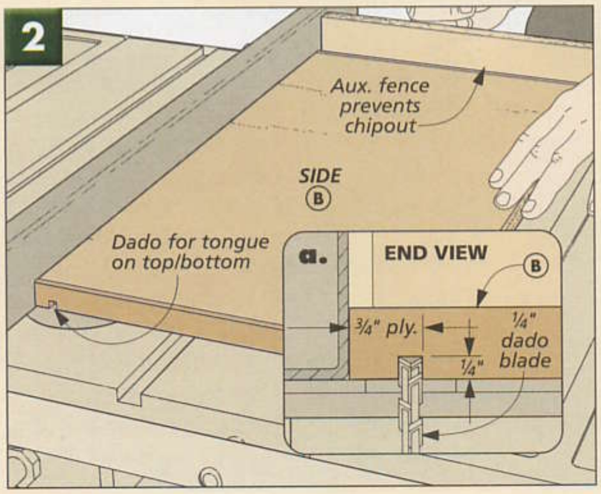

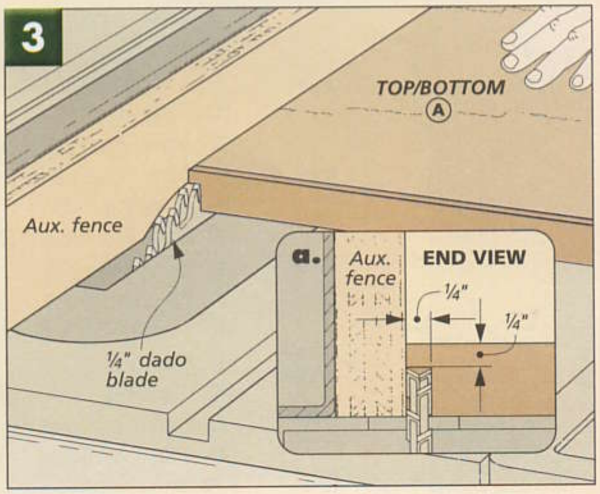

The sides are complete at this point, but you still need to drill four 3/8"-dia. holes on each top and bottom panel, as in Fig. 1. These holes are located in the same spot in each corner, so you can drill them all with a single setup at the drill press, as shown in the right margin photo.

BACK & ASSEMBLY. All that's left now is to dry assemble the case and cut a 1/4" plywood *back (D)* to fit the grooves. (Its grain runs up and down like the side panels.) Then you can glue the case together, as shown in Fig. 5. Just make sure the good face of the back panel is facing out.

TRIM. While the glue on the case is drying, you can begin work on the layer of trim that's attached to the bottom of each case, as shown in Fig. 1. The *front (E)*, *back (E)* and *side trim (F)* are all ripped 1 3/4" wide and start off extra long.

With the rough blanks in hand, all you need to do is rout a bullnose roundover on one edge, as shown in Fig. 6. This bullnose isn't quite a full roundover. Instead, I use a 1/2"-rad. round-over bit raised 3/8" above the router table, as indicated in Fig. 6a.

Once the bullnose has been sanded smooth, the trim pieces can be mitered to finished length. The pieces should be sized so the trim ends up 1/4" proud of the case on the sides and back (Fig. 1b) and 1" proud at the front of the case, as in Fig. 1a. (This allows for the 3/4" thickness of each drawer's false front, plus an extra 1/4" so the trim will end up with a consistent overhang all the way around the case.)

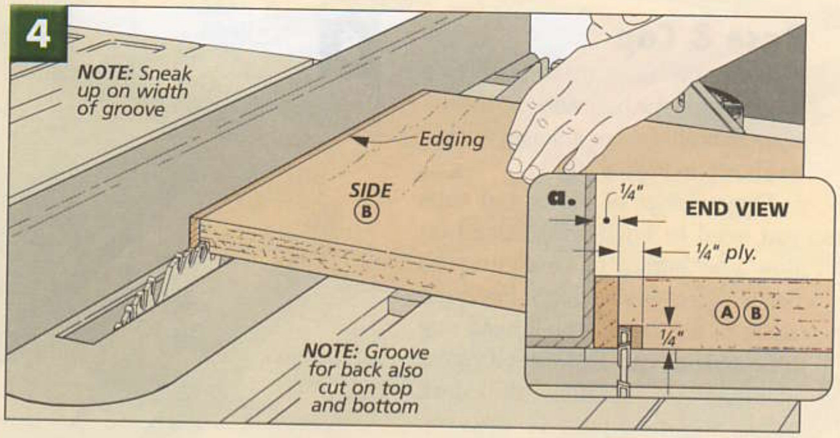

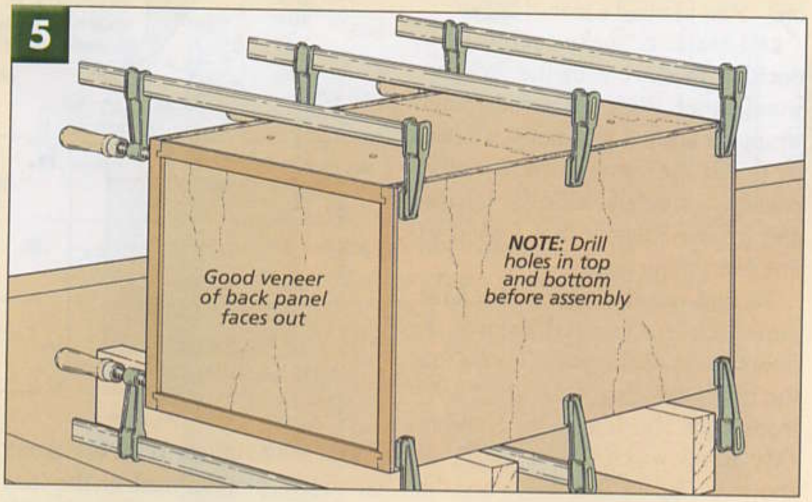

▲ *All the holes in the case top and bottom can be drilled before assembly with a single setup on the drill press.*

ASSEMBLY. At this point, the trim pieces are ready to be added to the case. There are two ways you can do this. One is to glue the trim pieces into a frame, using a band clamp and then attach this frame to the case. This way, you know each corner is going to end up tight. On the other hand, assembling a mitered frame can be a challenge to begin with.

Instead, I added the trim pieces to the case one at a time, starting with the back piece. But in order to make sure the overhang was going to be consistent, I drew layout lines on the bottom of the case. Just keep in mind that the side and back pieces should stand proud 1/4", while the front trim sticks past the case 1", as shown in Fig. 7a. Also, to avoid having to clamp these pieces down while the glue dried, I applied a little glue to the case and then screwed the trim pieces in place (Fig. 7).

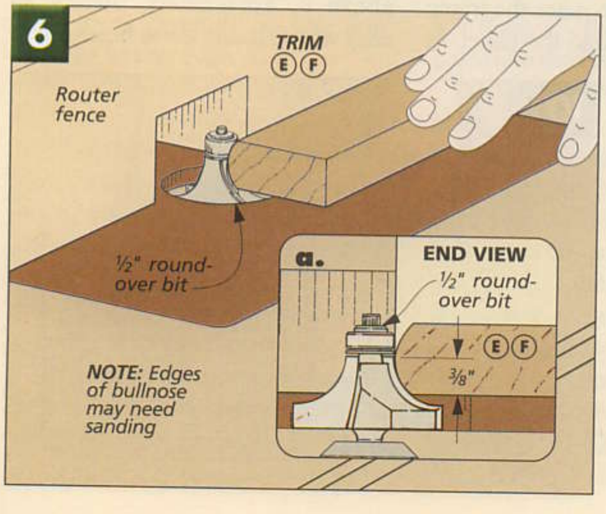

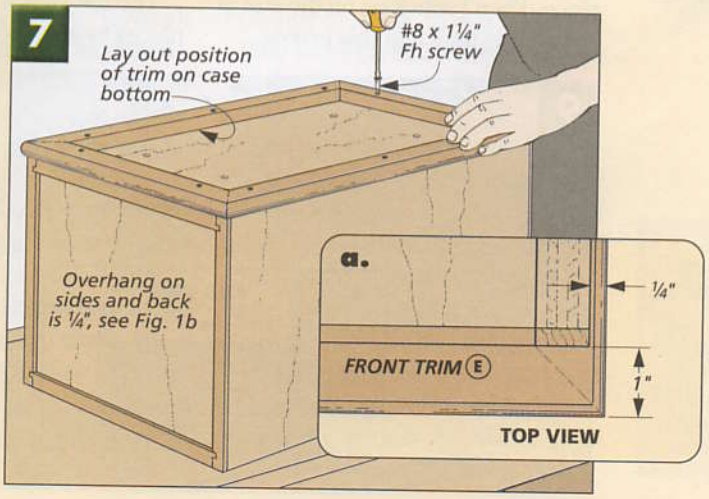

Base & Cap

Now that the cases are complete, it's time to build the base and cap assemblies that give them a finished look, as shown in Figs. 8 and 11.

The number of bases and caps you need to build will depend on how you intend to configure the cases when you're done. For each stack of file cases, you'll need one base and one cap. However, if you're planning on building the desk option shown on page 14, then you only need to build a pair of bases.

BASE PANEL. To make each base, I decided to start with the 3/4" plywood panel. With a mitered frame wrapping around this panel, it's easier to size the frame pieces to fit the panel — especially with the tongue and groove joinery that I used to line everything up.

To find out the size of the *base panel (G)*, I measured the overall dimensions of the trim "frame" on the cases and then subtracted 1½" from both the length and width. (My panel was 14½" x 22½", as shown in Fig. 8.) This way, when the frame pieces are added, the trim will overhang the base 1/4" on each side (including the front), as in Fig. 8b.

With the panel sized, the only thing to do is make the tongue, as in Fig. 8a. This is done by cutting a rabbet on all four edges. And what's important is that this rabbet is sized so the tongue ends up exactly 1/4" thick — it'll make the grooves in the frame pieces that much easier to cut. So before rabbeting the panel, I made a 1/4" x 1/4" groove in a test piece. Then I snuck up on the size of the tongue until it fit this groove.

▲ *When it's time to position the base on the case, a rabbeted block helps position the units quickly.*

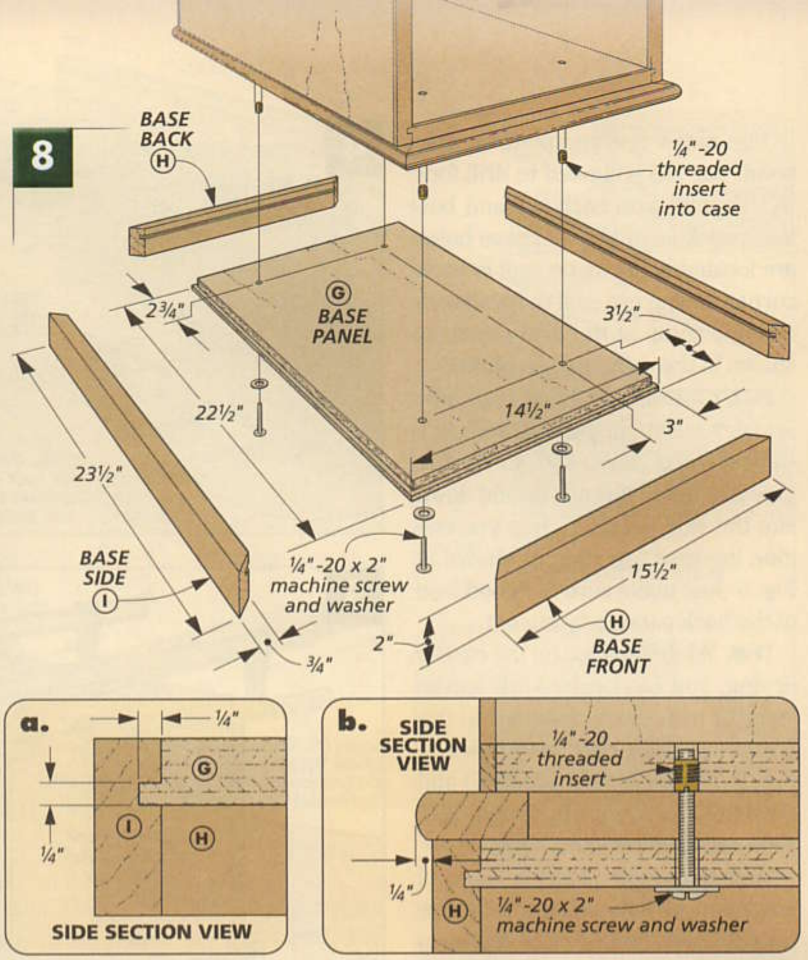

BASE FRAME PIECES. With the panel cut to size, you can work on the *base front (H), back (H),* and *sides (I)* that make up the base frame, as in Fig. 8. These 3/4"-thick hardwood pieces are ripped to width (2") but left extra long for now.

Now you're ready to cut the grooves that hold the tongue on the plywood. As you can see in Fig. 9 below, there's no trick to this. The tongue was sized to fit a 1/4" dado, so all you need to do is position the groove so the panel and the frame pieces end up flush (Fig. 8a).

The last step is to miter the frame pieces to wrap around the panel, as indicated in Fig. 8. I did this at the table saw with the miter gauge rotated 45°, and I started by mitering one end of each base piece. Then I used a stop block on an auxiliary miter gauge fence so each pair would end up identical.

ASSEMBLY. Now that the base frame pieces are complete, you can glue them around the panel. Then when the glue has dried, the holes for connecting the base to the case above are ready to be drilled.

The holes in the base have to line up exactly with the holes in the case above it. Fortunately, there's an easy way to locate these holes. First,

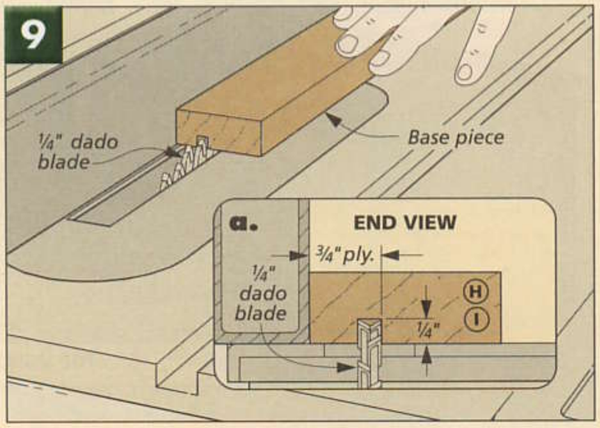

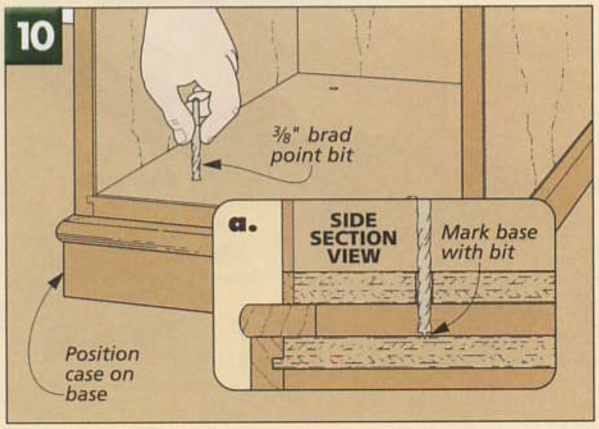

set one of the cases on the base and position it so there is a ¼" overhang on the sides and back. (A rabbeted block will helps with this, as shown in the left margin photo.)

Now with a ⅜"-dia. brad point bit, you can transfer the position of the holes in the case to the base panel, as shown in Figs. 10 and 10a. Since the drill bit matches the diameter of the hole, the bit can't wander too far out of alignment, and the centerpoint of the brad point bit will leave a visible mark on the base panel.

CAP. With the holes in the base drilled, you can turn your attention to the cap, as in Fig. 11. The construction here is similar to the base, but with this assembly, there's a layer of trim underneath.

CAP PANEL. Like the base, I started by cutting the *cap panel (J)* to size from ¾" plywood. Then I cut the rabbet that forms the tongue on the four edges of the panel.

CAP FRAME. With the panel complete the next step is to add the frame that wraps around the panel, as shown in Fig. 11. So you can cut the 1¼"-wide *cap front (K), back (K)*, and *sides (L)* to rough length.

As with the base, the first thing to do is cut the groove that holds the tongue, as in Fig. 11a. Then you can miter the ends of the frame pieces to wrap around the panel.

But don't glue the frame pieces to the panel just yet. To ease the top edge of the cap, I routed a roundover on each piece, as you can see in Fig. 12. The trick here is making sure you're routing the *top* edge of the piece. So it's a good idea to lay out the pieces carefully so you don't rout the wrong edge.

CAP ASSEMBLY. Now you can assemble the cap just like the base. But instead of drilling holes through the panel, I added two filler strips to the cap and drilled holes in them for the threaded inserts. The *cap filler strips (M)* are planed to fit under the panel and then cut to size and glued in place, as shown in Fig. 11a.

To locate the holes for the inserts, I used the same technique I used for the holes in the base (Fig. 10). Just remember that these holes are only

11

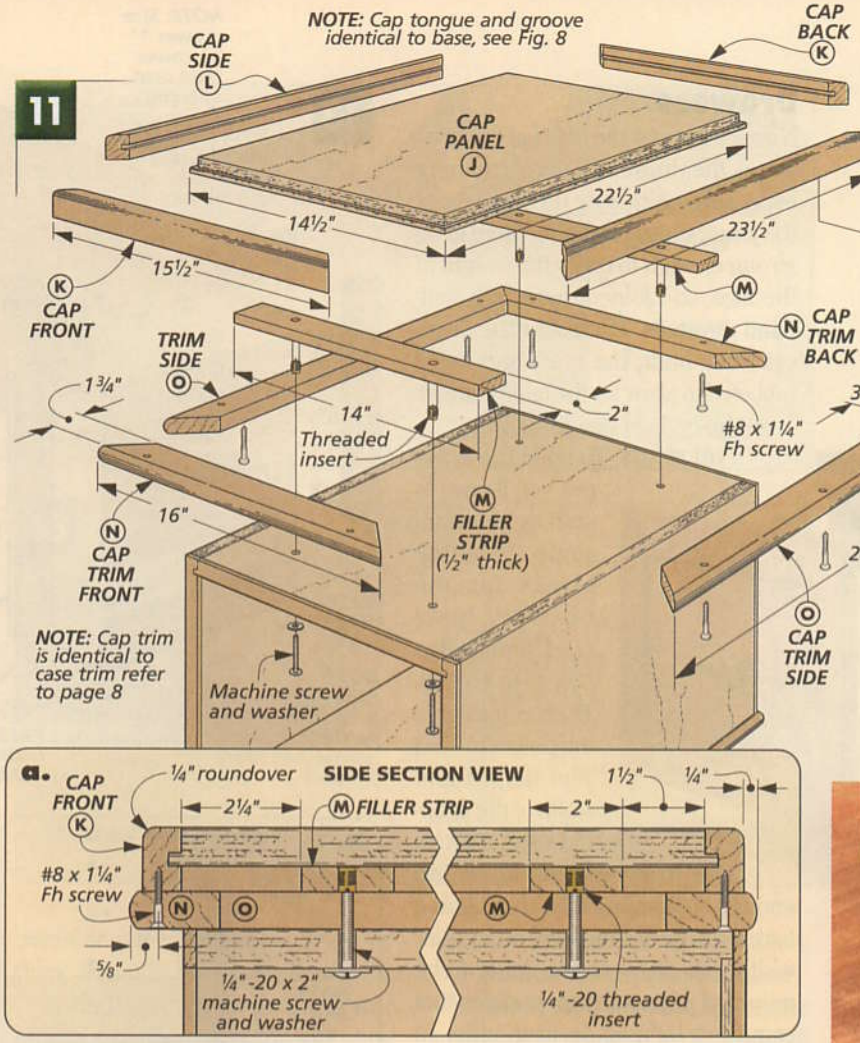

12

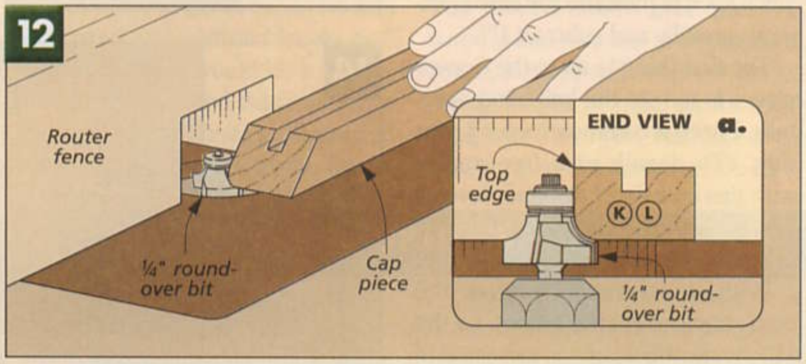

½" deep — they're not through holes like the others you've drilled.

CAP TRIM. With the filler strips in place, the cap gets a layer of trim just like the case pieces, as in Fig. 11. In fact, the *cap trim front (N), back (N)*, and *sides (O)* are identical to the trim on the cases. So after routing the bullnose and mitering the ends, you can attach them to the cap. But at this point, there are a couple differences to note. For one thing, the overhang of this trim is the same on all four sides (¼"). Also, the edge the trim is attached to is only ¾" thick, so you have to be a little more careful where you position the screws, as in Fig. 11a.

THREADED INSERTS. Now that the cap is complete, it's time to add the threaded inserts to the bottom of the cases and the cap. To do this, I used an inexpensive driver that chucks into a hand drill, as in the right margin photos. It allows you to apply plenty of downward pressure, but the inserts still have to be driven in straight. For a shop-built jig that makes this almost automatic, go to our web site. (See the box at right.)

▲ *Inexpensive drivers are available for installing threaded inserts with a hand drill. For sources, see page 35.*

Woodsmith GO ON-LINE EXTRAS

You can also install threaded inserts using a simple, shop-built jig. For instructions, go to: woodsmith.com

Drawers

Now it's time for the heart of this project — the drawers. There's nothing especially unique or difficult about the joinery here. I wanted them to be strong enough to carry the weight of the files, so I joined them with half-blind dovetails. Then after the drawers were built, the top edges were rabbeted to allow for the tabs or hooks on the ends of hanging files.

▲ *Heavy-duty slides allow the drawers to open smoothly — even when they're full of files. To see how these slides were installed, turn to page 16.*

CUT TO SIZE. To build the drawers, you'll need to start by gluing up some ½"-thick blanks for the *fronts (P), backs (P),* and *sides (Q),* as in Fig. 13. Then you can cut the pieces to size. The height and width of the drawers is pretty critical.

The drawers should be tall enough so hanging files aren't going to rest on the bottom. And as for their width, the drawers are going to be mounted on metal drawer slides that require a ½" gap on each side, so you'll need to measure the case openings carefully and subtract 1".

The first thing to do to the drawer pieces is to rout the half-blind dovetails. I used a common router jig for this. (To download a free article with tips on using half-blind dovetail jigs, go to the Online Extras page on our web site: www.woodsmith.com.)

With the dovetails routed, the next step is to cut the groove for the ¼" plywood bottom, as indicated in Fig. 13c. It's best to cut this groove so it goes through the bottom tail on the sides. This way, when you assemble the drawer later, the groove will be hidden automatically.

BOTTOM & ASSEMBLY. At this point, you're ready to cut the *bottom (R)* to fit in the grooves you just cut and then assemble the drawers. There are a lot of dovetails to apply glue to here, so you'll want to give yourself a little extra time by using a slow-setting glue. I like to use liquid hide glue for large dovetailed drawers. There's plenty of assembly time, and any excess glue is easy to clean up — especially on the end grain on the front and back pieces.

DOVETAIL LAYOUT

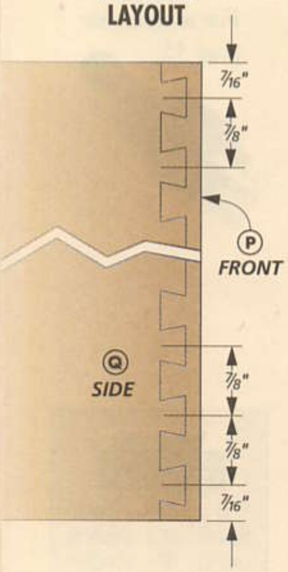

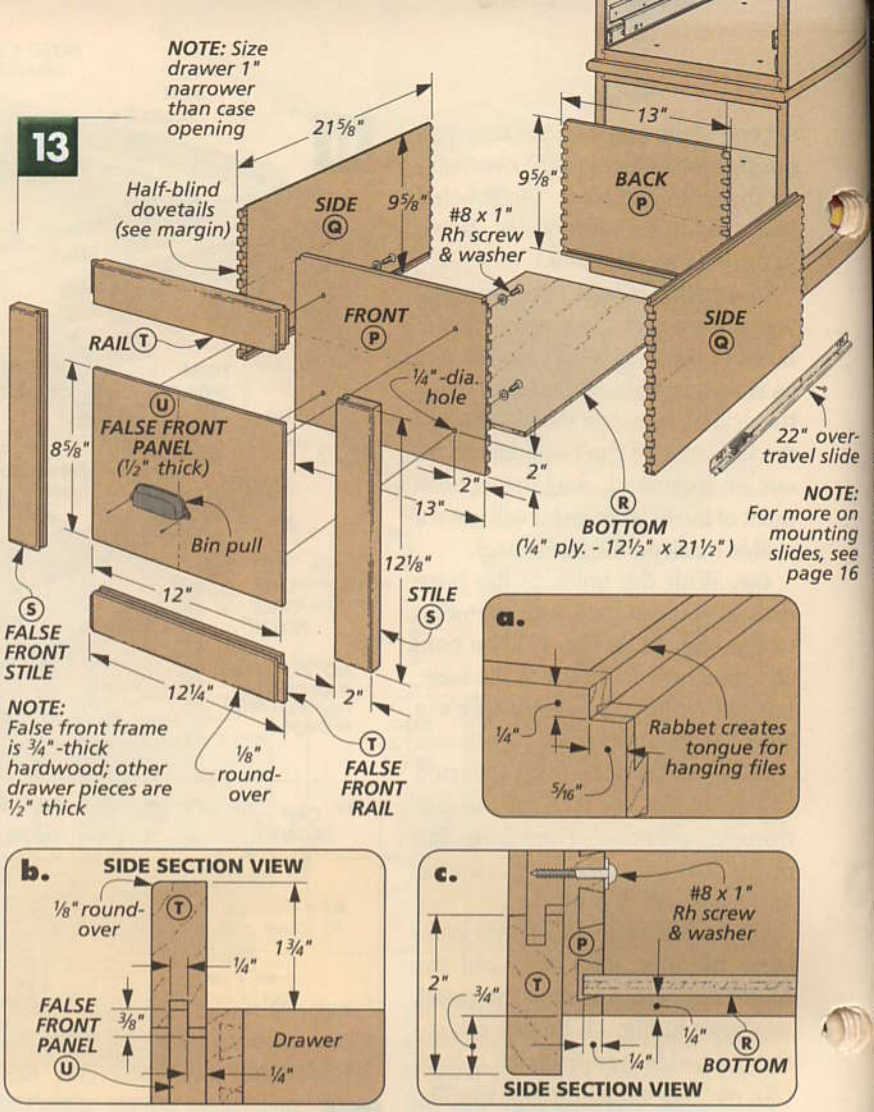

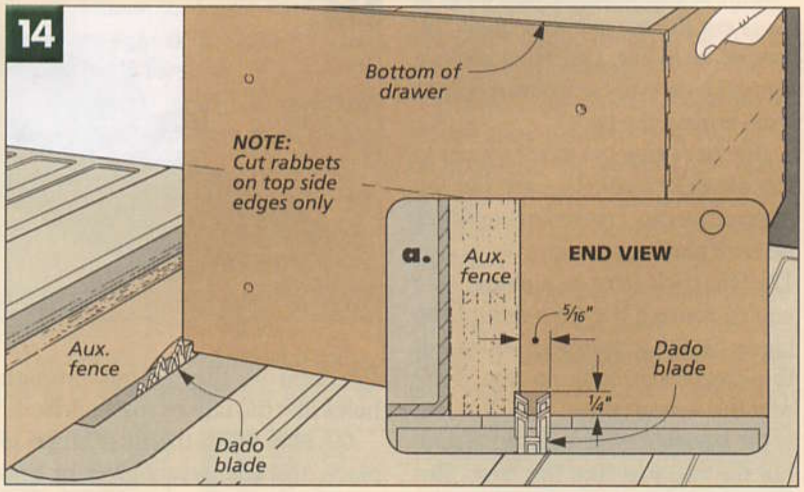

RABBET & INSTALLATION. There's still a couple more things I did before beginning work on the false front. First, a rabbet can be cut on the top, outside edges of the drawer sides, as shown in Fig. 14. This rabbet leaves a 3⁄16" tongue for the hanging files to rest on (Fig. 13a).

Second, you can install the drawer on its drawer slides. There are a couple of ways to do this, and I'll walk you through those on page 16.

FALSE FRONT FRAME. Now it's time to begin work on the false front for the drawer. There are several options here. I built a frame and panel, using a piece of ½"-thick hardwood for the panel. But as you can see in the box

below, there are a couple of other drawer faces for you to choose from.

FRAME. To build a frame and panel false front, I started by cutting the *stiles (S)* and *rails (T)* to size from ¾"-thick stock, as in Fig. 13. The stiles are easy enough: just measure from the top of the case down to the trim and subtract ⅛" (for the 1/16" gaps at the top and bottom of the drawer). The rails should be sized so the assembled frame will be flush with the case on the sides, but don't forget to allow for the ⅜" stub tenons on the ends, as in Fig. 16.

With the pieces sized, you can cut the stub tenon and groove joinery for the frame. All four pieces get a centered groove (⅜" deep) along the inside edge. As you can see in Fig. 15, I did this at the table saw with a regular blade. By flipping the piece end for end between passes, the groove will be centered automatically. Just sneak up on the final width of the groove (¼").

For the stub tenons on the ends of the rails, I switched to my dado blade and added an auxiliary fence, as shown in Fig. 16. Again, flipping the piece over between passes will center the tenon. And you want to sneak up on the blade height until the tenon fits snug in the grooves.

PANEL. To make the *false front panel (U)*, you'll need to glue up an oversize panel and plane it to ½" thick, as in Fig. 13. Then you can cut it to fit the grooves in the frame pieces. But the fit shouldn't be snug — a solid wood panel has to be able to expand and contract freely. So I sized it so there would be a ⅛" gap at each edge. Then I cut a rabbet on the back face to create a tongue that would fit the grooves in the frame. Again, you don't want the shoulders to fit tight so the panel can expand.

ASSEMBLY. At this point, the frame and panel is ready to be assembled. You don't want to glue the solid wood panel into the grooves in the frame, but you can secure it by centering a spot of glue on its width (height). Then you can screw the false front to the drawer front.

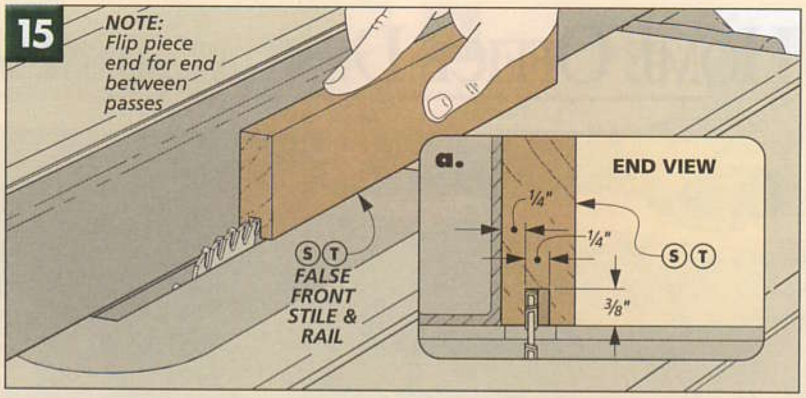

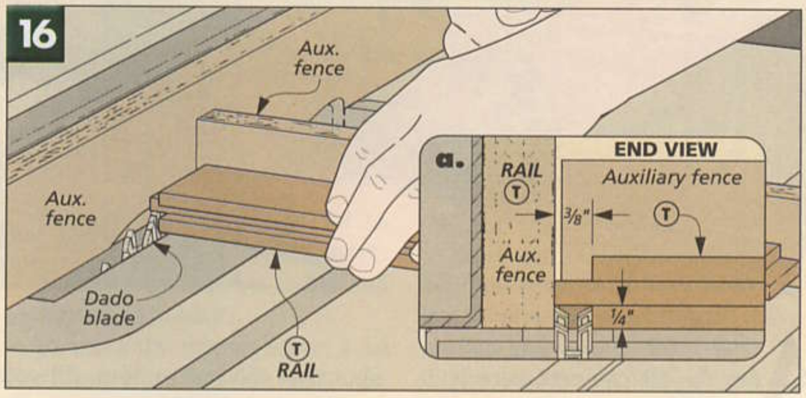

Woodsmith GO ON-LINE EXTRAS
For more on using a half-blind dovetail router jig and on cutting raised panels on the table saw, go to:
woodsmith.com

DRAWER FRONT OPTIONS

You can give your file cabinet a slightly different look simply by building different false fronts for the drawers, as you can see in the photos below. And you'll find that building them is just about as straightforward as the flat panel fronts.

The traditional raised panel false front is almost identical to the flat panel front. But instead of a ½"-thick panel, you'll want to start out with a ¾"-thick panel. Then the front face can be beveled on the table saw. (For more on this, go to the Online Extras section on our web site: www.woodsmith.com.)

The flat panel option is even easier. Just glue up a ¾"-thick panel and size it so there's a 1/16" gap at the top and bottom. (It's flush with the sides of the cabinet like the other false fronts.) Then round over the sides (ends) with a ⅛" round-over bit, backing up the cut so you don't end up with any chipout.

Using a raised panel instead of a flat one will give the cabinet a more traditional look.

A more contemporary option for the false fronts is to glue up flat panels and round over the ends.

HOME OFFICE DESK *A handsome storage solution.*

A desk needs more than just file storage, so there's a shallow pencil drawer between the cabinets.

After the file cabinets were built, someone suggested they would make a nice desk. Just connect two file cabinets with a desk top. It's an easy modification to make, and the end result looks quite professional, as you can see in the photo above.

Our top is really just a modified cap, and there's even a pencil drawer that fits between the cabinets, as shown in the inset photo. All you need to do is build four case units and two base units, and you'll be ready to work on the desk top.

TOP PANEL. The desk top is made up of two plywood panels and some edging. The *desk panel (A)* is cut to size from 3/4" plywood, as shown in Fig. 1. Like the cap panel, it has a 1/4" x 1/4" tongue on the bottom face (Fig. 1a). The second panel is a filler panel that will be cut from 1/2" plywood or MDF. (It won't be visible, so it doesn't have to match the wood on the rest of the project.) But before cutting this panel to size, I added the edging around the plywood.

EDGING. The 3/4"-thick *front (B), back (B)* and *side edging (C)* is cut to width to match the thickness of

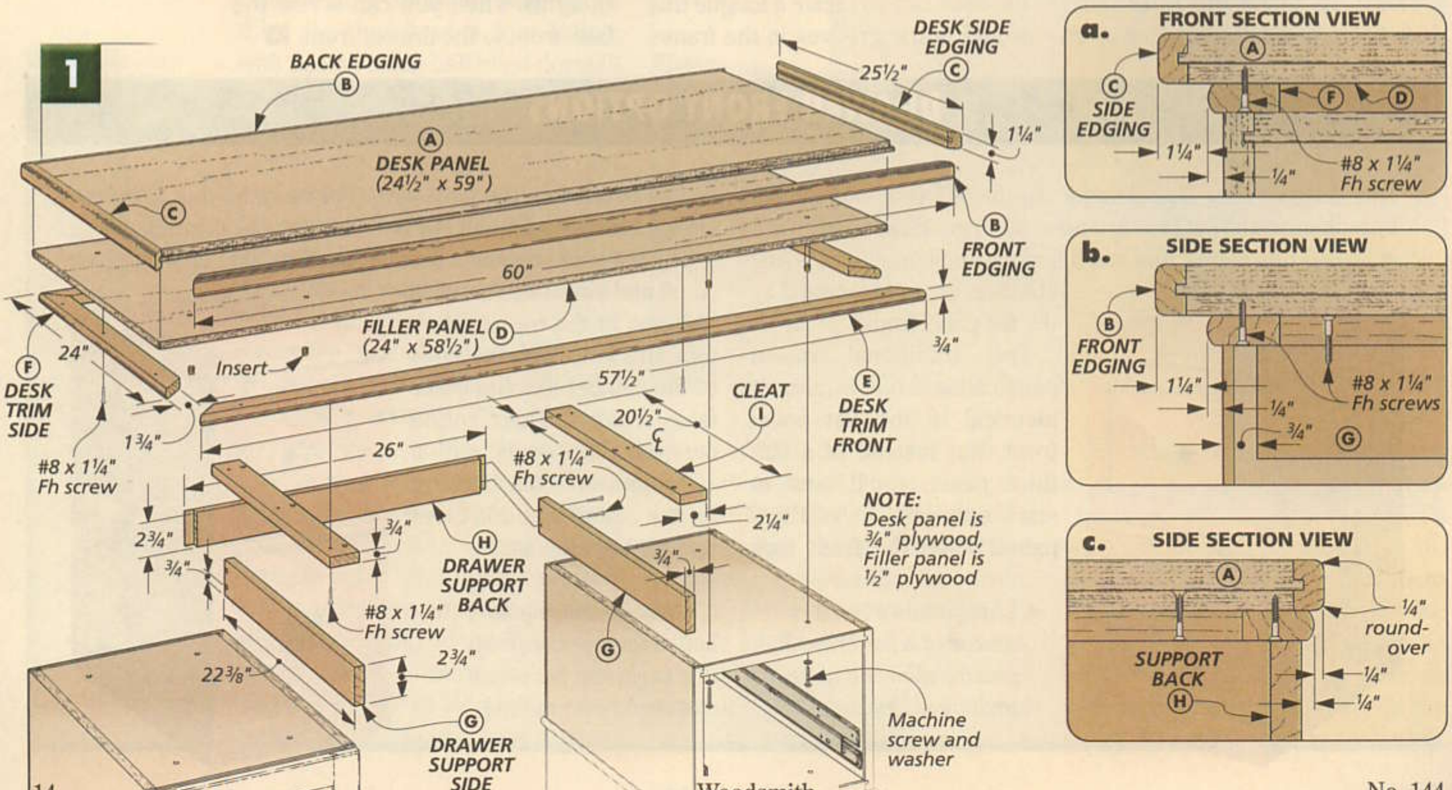

the two plywood panels, as shown in Figs. 1b and 1c. Then you can cut a groove to fit over the tongue on the desk panel, as in Fig. 1a. When that's done, the edging pieces can be mitered to length to wrap around the panel and glued in place.

Before routing the roundover on the top and bottom edges of the edging, I cut the ½" *filler panel (D)* to fit under the desk panel and glued it in place. Now there's plenty of support for your router base as you're rounding over the edging (Fig. 1c).

TRIM. Like the cap, the desk top also has a ¾"-thick layer of *trim front (E)*, *back (E)* and *sides (F)*. The real difference is that the trim *sets in* from the desk top ¼" rather than stands proud. Other than that, its construction is the same — even the threaded inserts can be located using the same method as before (with a ⅜" brad point bit).

DRAWER SUPPORT. At this point, the desk top is complete, and you could simply set it on the two cabinets and attach it with machine screws. But I wanted to add a pencil drawer to the desk, so I made a U-shaped drawer-support frame first. It consists of two *sides (G)* and a *back (H)*.

After cutting these pieces to size, I rabbeted the back to hold the side

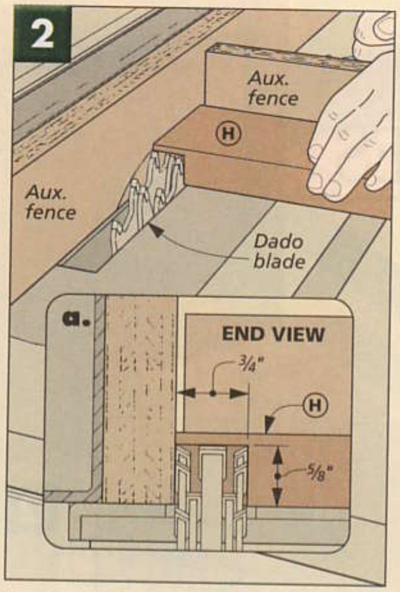

pieces, as shown in Figs. 2 and 3a. This way, you can glue and screw the frame together, but it will still look finished in back.

To attach the support frame, I cut two *cleats (I)* to fit inside the trim in the desk top. Then after attaching them to the frame (Fig. 3a), I turned the assembly upside down and centered it under the desk top, as shown in Fig. 3.

DRAWER. All that's left to build is the drawer. As you can see in Fig. 4, I used the same construction as the file cabinet drawers. The *front (J)*,

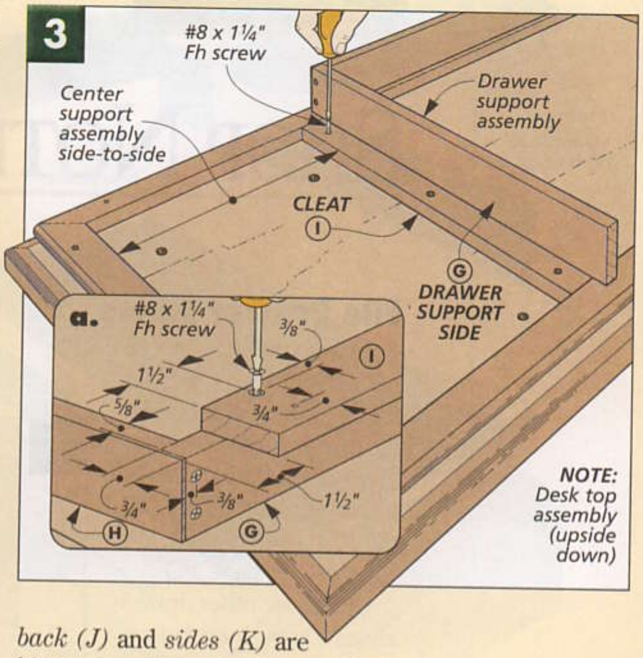

back (J) and *sides (K)* are ½" thick and joined with routed half-blind dovetails. And the *bottom (L)* is a ¼" plywood panel that fits into a shallow groove (Fig. 4a).

The *false front (M)* is a ¾" piece that's sized to match the length of the support back, minus ⅛" for the ¹⁄₁₆" gaps on each side of the drawer. Then the front edges are rounded over, and it can be screwed to the drawer, as in Fig. 4a. Finally, to install the drawer, I used a shorter slide and a slightly different technique, as described on page 16. ■

MATERIALS & SUPPLIES*

A	Desk Panel (1)	¾ ply. - 24½ x 59
B	Desk Front/Back Edging (2)	¾ x 1¼ - 60
C	Desk Side Edging (2)	¾ x 1¼ - 25½
D	Desk Filler Panel (1)	½ ply. - 24 x 58½
E	Desk Trim Front/Back (2)	¾ x 1¾ - 57½
F	Desk Trim Sides (2)	¾ x 1¾ - 24
G	Drawer Support Sides (2)	¾ x 2¾ - 22⅜
H	Drawer Support Back (1)	¾ x 2¾ - 26
I	Drawer Support Cleats (2)	½ x 2¼ - 20½
J	Pencil Drawer Front/Back (2)	½ x 2⅝ - 23½
K	Pencil Drawer Sides (2)	½ x 2⅝ - 17⅝
L	Pencil Drawer Bottom (1)	¼ ply. - 17½ x 23
M	Pencil Drawer False Front (2)	¾ x 2¾ - 25⅞

- (1 pr.) 18" Full-extension Slides w/Screws
- (8) ¼"-20 Brass Threaded Inserts
- (8) ¼"-20 x 2" Machine Screws
- (8) ¼" Flat Washers
- (30) #8 x 1¼" Fh Woodscrews
- (2) #8 x 1" Rh Woodscrews
- (2) #8 Flat Washers

* List is for desk top and pencil drawer only.

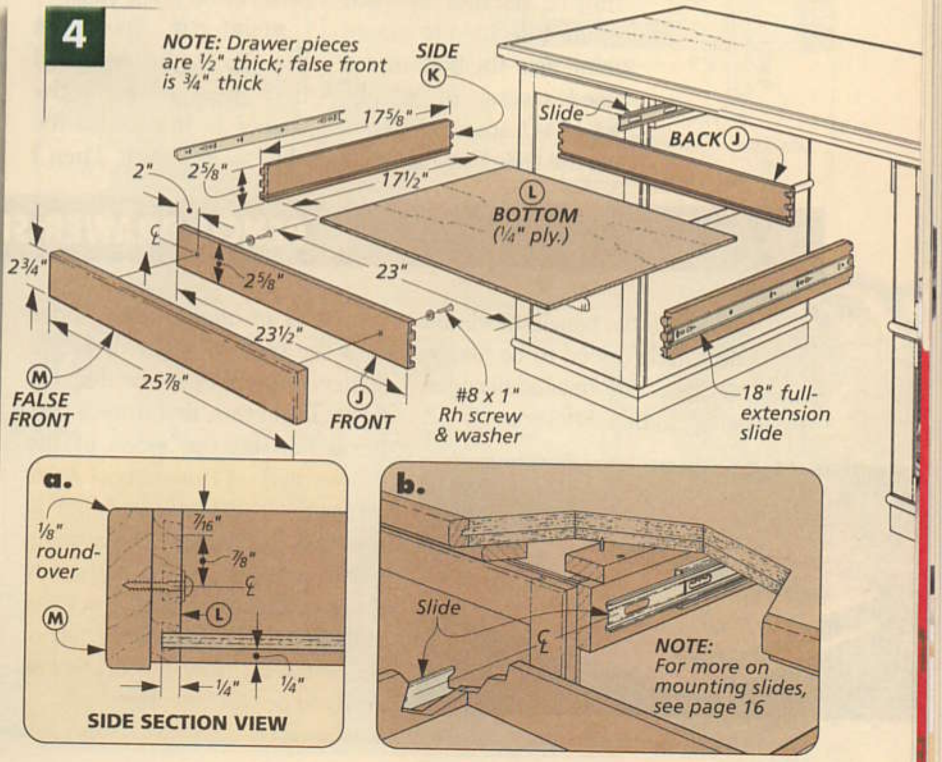

TIPS FROM OUR SHOP

SHOP NOTES

File Drawer Slides

A file cabinet drawer can get a lot of heavy use. So for the cabinet in this issue (page 6), I chose heavy-duty slides. (They're "over-travel" slides, so they'll pull out 1"-2" *past* the case. For sources, see page 35.)

Unlike the other drawer slides I have used before, these heavy-duty slides don't disassemble into two halves. Instead, there's a clip that's screwed to the drawer and then locks onto the slide as the drawer is set in place.

MOUNTING THE SLIDES. To mount the drawer, I start with the slide and the clip put together, as in Fig. 1. You can locate the slides anywhere along the height of the drawer as long as they're parallel to each other. I decided to mount mine near the bottom and used a scrap of 1/4" plywood as a spacer. (I like to set the slide back 1/8" or so from the front.) Then it can be screwed to the case.

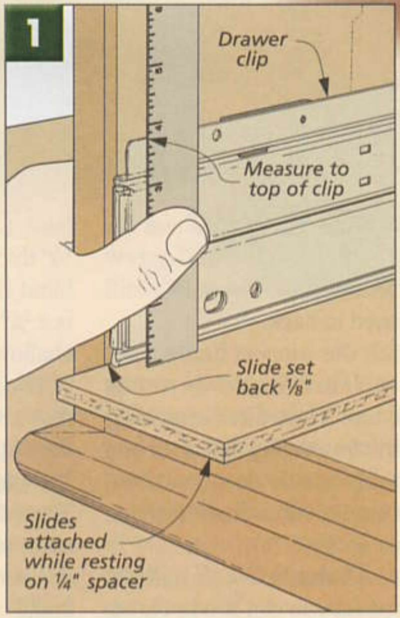

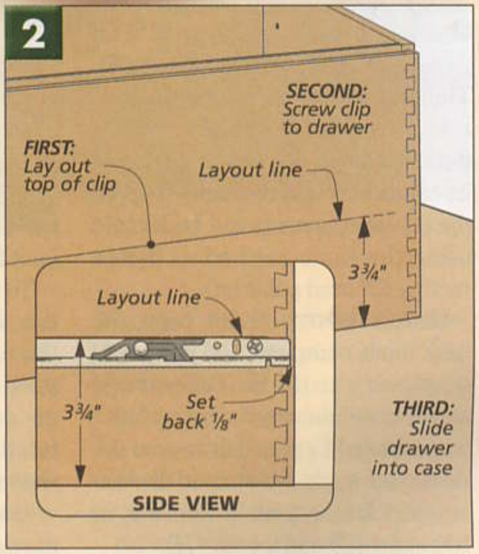

MOUNT CLIP. To mount the clip to the drawer, I first measure from the spacer to the top of the clip, as in Fig. 1. Then I transfer this dimension to the drawer side and draw a layout line across the drawer (Fig. 2).

Now you can remove the clip from the slide and screw it flush with your layout line (Fig. 2a). After mounting a slide on the other side of the drawer, simply set the clips over the slides and push the drawer into the case until the clips lock into place. W

PENCIL DRAWER SLIDES

The slides for the pencil drawer on the desk didn't need to be heavy-duty slides. So the installation ended up being slightly different.

Instead of aligning the slides near the bottom of the drawer, I centered them, as in the detail at right. To do this, first draw a centered line on the sides of the drawer and on the support sides on the desk. Then for each half of the slide, just center the mounting holes on the centerlines and screw them in place. (Again, I set the slides back 1/8" from the front of the drawer.) Now the drawer is ready to be slid into place.

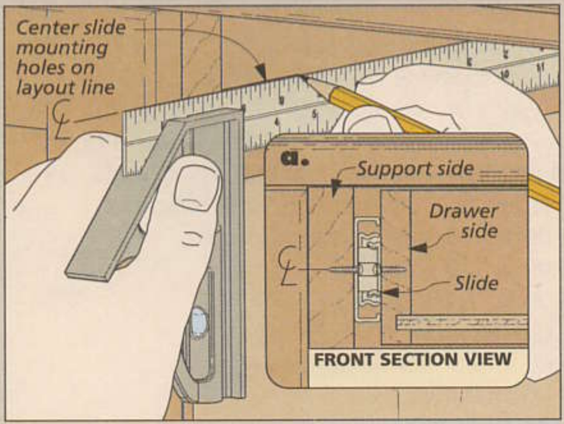

Felt Liner

It's the finishing touches that can make all the difference with a project. And for the jewelry chest-on-chest (page 28) and the clock (page 20), I decided to finish off the drawers (and the compartment) by adding felt liners inside.

To make this quick and clean, I used posterboard and adhesive-backed felt. (See page 35 for sources.) All it takes is a few minutes for each opening.

As you can see in the drawing at right, I lined the bottom first by cutting a piece of posterboard to fit in the opening and then adding a piece of oversized felt. Once the felt is trimmed flush, you can simply lay it in the drawer.

For the sides, I cut the posterboard a little short of the upper edge of the drawer and then wrapped the felt over the top edge to hide the posterboard. Then when the felt was trimmed flush, I spot glued the posterboard to the side of the drawer. W

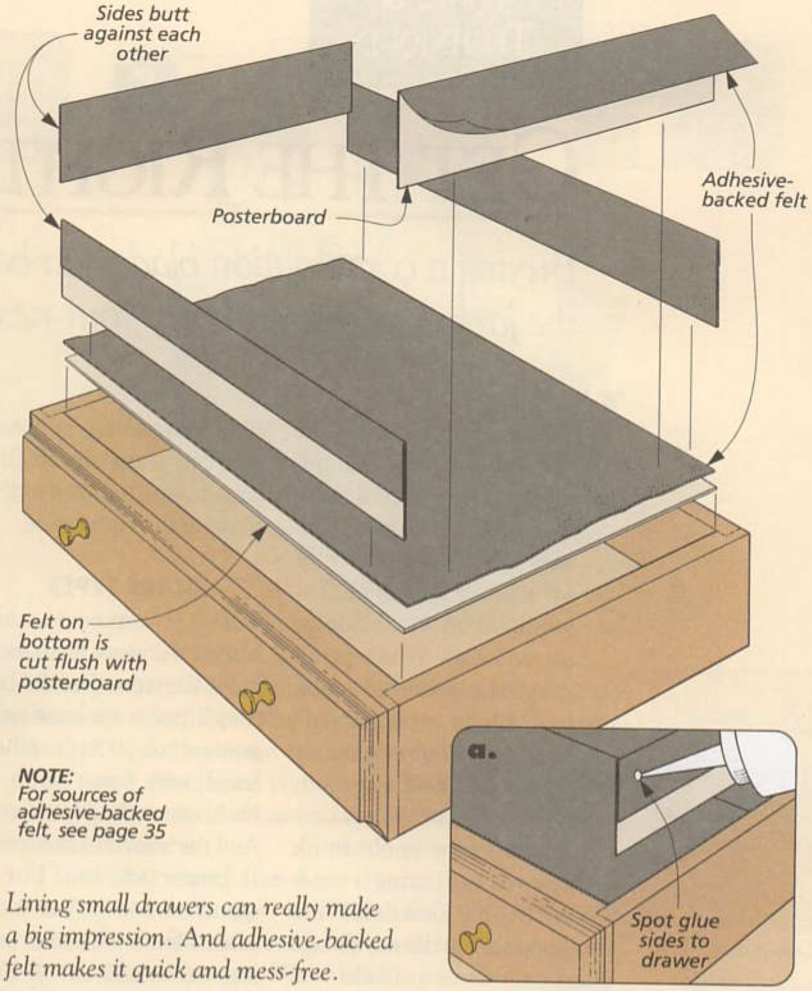

Lining small drawers can really make a big impression. And adhesive-backed felt makes it quick and mess-free.

Making a Guide Bushing Template

To create the movement opening for the clock on page 20, I used a straight bit with a guide bushing attached to the base of my router, as shown in the margin photo at right. This bushing rides against a 1/4" hardboard template that's attached to the workpiece with double-sided tape. The trick is that the opening in the template isn't the same as the opening for the clock.

SIZE OF OPENING. Figuring out how much larger to make the opening is easy. Just measure from the edge of the bit to the edge of the bushing, as shown in Fig. 1a. Then add this to the radius of the clock body (or double it and add it to the diameter).

MAKE TEMPLATE. Now that you know the size of the opening, making the template is easy. To cut the opening in the 1/4" hardboard, I drilled overlapping holes until all the waste was removed, as in Fig. 1. (If you have a jig saw, you can drill a single hole and then use the saw to cut the opening.)

Now that the opening is roughed out, all that's left is to sand it smooth, as in Fig. 2. Don't worry about making the opening perfectly round. With the lip around the movement, it won't be visible anyway.

ROUT OPENING. To use the template, I first taped it to the clock side piece and taped this workpiece to my bench. (Refer to Fig. 5 on page 21.) Then the opening can be routed in several passes. W

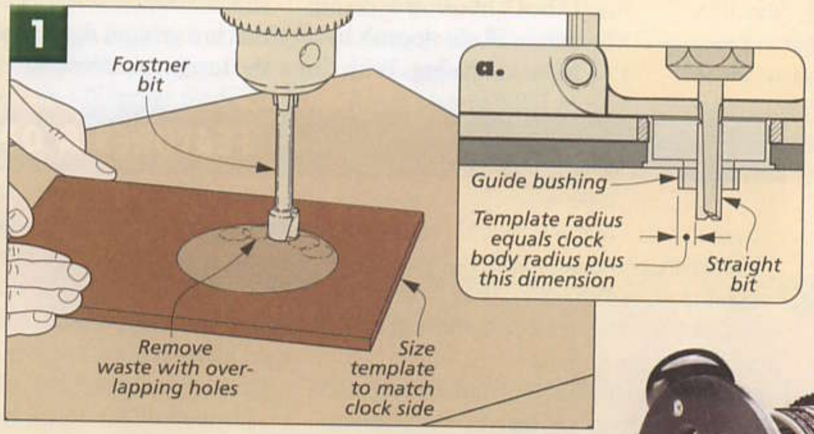

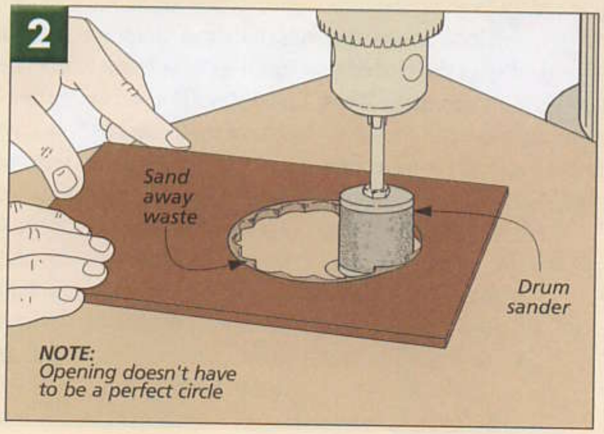

A router guide bushing follows a hardboard template to create the opening for the clock movement on page 20.

GET THE RIGHT COMBINATION

Buying a combination blade can be confusing. We'll cut through all the jargon so you can buy your next saw blade with confidence.

When you walk into a local tool store and tell the clerk you want a combination blade for your table saw, you'd better be ready for a lot of questions. Do you want an ATB blade or an ATB&R? What price range? Do you want a thin-kerf blade or standard? How about *Teflon* coating? Or an anti-kickback tooth design? There are so many choices now you'd think you were ordering a sandwich at the local deli. What happened to the days when a combination blade was just a combination blade?

But choosing a combination blade doesn't have to be confusing. With the right information in hand, you can translate all the jargon and find the right blade at the right price.

BLADE TYPES

When it comes to saw blades, the more teeth they have, the smoother the cut they'll make (at least as a general rule). On the other hand, with fewer teeth, a blade can make a faster cut. And the shape of the teeth is important too. For a smooth crosscut, you want lots of teeth with alternating top bevels (ATB). For fast ripping, a saw blade should have far fewer teeth that are ground flat across the top (a raker tooth).

A combination blade makes a compromise — and a pretty good one. It doesn't make any one cut perfectly, but it does them all well. It will rip, crosscut, and even do a good job with veneered plywoods. It's a great choice if you want to put one blade on your saw and never have to change it. But as it turns out, there's more than one type of "combination" blade and that's where a lot of the confusion starts.

ATB&R. A true "combination" blade, the 50-tooth ATB&R (Alternating Top Bevel & Raker), has been around a long time. It's called a combination blade *not* because it's used for a combination of tasks but because it has a combination of tooth types: one raker tooth followed by four ATB teeth, as you can see in Fig. 1. And each group of five teeth is separated by a deep gullet that helps clear out saw dust quickly.

Because of its combination of tooth types, the 50-tooth ATB&R will crosscut almost as smoothly as a 60-tooth crosscut blade and rip about as quickly as a standard rip blade.

ATB. The second type of blade, the 40-tooth ATB shown in Fig. 2, isn't a

FEATURES & OPTIONS

Some of the features you'll see on saw blades are pretty standard. But since manufacturers are always trying to improve and update their products, there are also a lot of newer options.

CARBIDE. Virtually all manufacturers use C-4 "micro-grain" carbide for their combination blades. (C-4 refers to the hardness of the carbide.) When you look at a blade, you can't judge the quality of the carbide, but you can judge the quantity. The thicker the carbide, the more resharpenings and longer life you'll get out of the blade.

THE PLATE. The carbide teeth of the blade are brazed onto a steel plate or blank. In the past the plates were stamped out of sheets of soft steel. Today most blanks are cut with a laser. This allows the blanks to be cut from much harder steel and results in a more rigid blade and a smoother cut.

SLOTS. When you look at combination blades, you might notice a couple different types of slots cut into the plate. Expansion slots are standard on the 40 tooth ATB, but you won't see them on the ATB&Rs. The large gullet between the sets of teeth serves this purpose.

A newer feature that you'll find on some blades is the noise reduction slot. These slots usually appear as squiggly or zig-zag lines cut into the plate. The idea is to reduce noise by reducing vibration of the blade. If you want to keep your shop a little quieter, this might be something worth looking for.

TEFLON COATING. Several brands of combination blades are available with a *Teflon* coating. The *Teflon* is intended to reduce friction and prevent overheating. The problem with a *Teflon* coating is that it tends to wear off or be ground off during sharpening. This option probably makes more sense on a thin-kerf blade (see box on opposite page).

ANTI-KICKBACK If you look at a blade and notice odd-looking "humps" on the shoulders of some or all of the teeth, you're seeing an anti-kickback feature. (This is a relatively new option that will probably become more common.) This tooth design is intended to limit your feed rate and lessen the chance of kickback from overfeeding. I doubt this option adds much if anything to the cost of the blade, and it makes good sense to me.

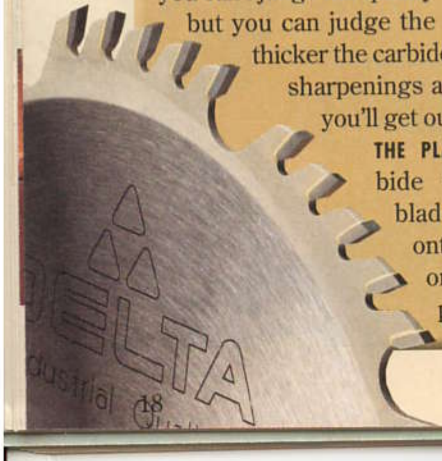

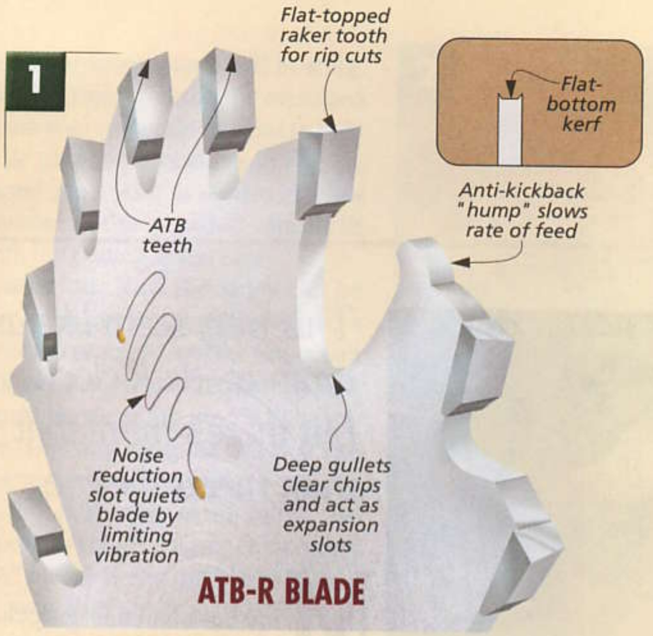

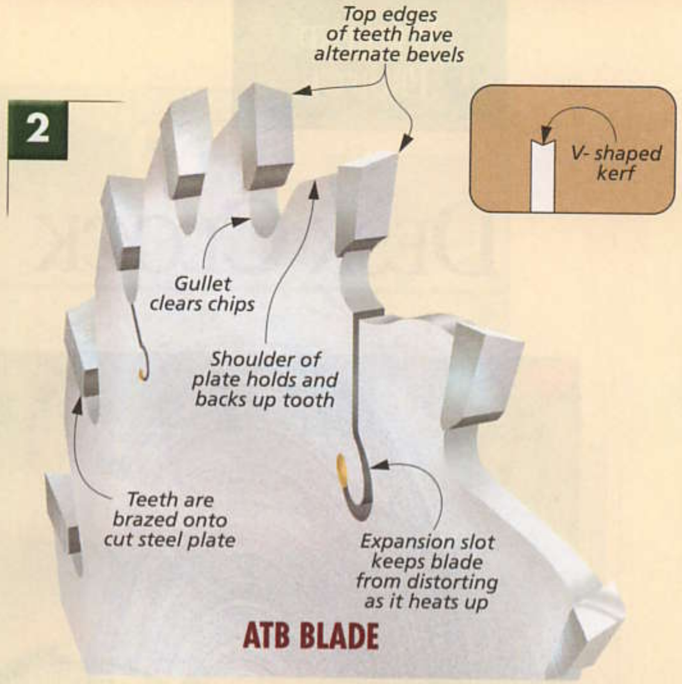

true "combination" blade — there's only one type of tooth. So it's sometimes called a "general-purpose" blade. It does the same thing with a slightly different strategy. The low number of teeth allow it to rip quickly, and the ATB shape of the teeth allow for a smooth crosscut.

Honestly, it's hard to find much of a difference in the performance of 40-tooth ATB and 50-tooth ATB&R blades. Both types will do a good job of ripping, crosscutting, and cutting plywood.

So how do you choose the right blade? I'd suggest you take a look at some of the specific features on each blade (as described in the box at left) and pick the blade with the extras that are important to you. But first, there's one other "type" of blade you might want to take a look at.

"SUPER PREMIUM" ATB. The other "type" of combination blade is what I think of as a "super premium" blade. It also has a 40-tooth ATB design, and it might feature a "planer-style" tooth, as described in the margin. But what really sets this type of blade apart is its quality (and its price). It's manufactured to much higher standards than other combination blades.

For instance, the plate of the blade is flattened to within .001" of runout (side-to-side movement). And the teeth are also ground with more precision than on an ordinary blade. In fact, sometimes the teeth are even double-ground. So what you end up with is a combination blade that's not much of a compromise — it'll make all types of cuts very smoothly and easily.

So how do you find a "super premium" blade? About the only way to distinguish it is by its price. You can pick up a standard ATB or ATB&R blade for about $40 to $70. A "super premium" blade can run from $90 to $120. And that's the big drawback to this type of blade. It isn't cheap.

Also, the "super premium" blade, like any other saw blade, will only cut well if it stays sharp. When it gets dull, it might not cut much better than a less expensive blade. Plus, to get it resharpened to the same precision, you may have to send it back to the factory.

It might sound like I don't think this type of blade is worth the cost, but that's not the case. We use one of these blades here in the *Woodsmith* shop. Right out of the box, it'll cut smoother than any combination blade you've ever used, and if you're willing to spend the money, I'm sure you won't be disappointed.

But before deciding on the type of combination blade to buy, you might want to think about the kind of work you're going to do with your saw.

If you plan to use your saw blade "hard" (to cut as much dimensional lumber as you do fine hardwoods), one of the less expensive ATB or ATB&R combination blades might be the best way to go. But if you plan to build mostly furniture-quality projects and want glass-smooth cuts, a "super premium" blade is hard to beat. W

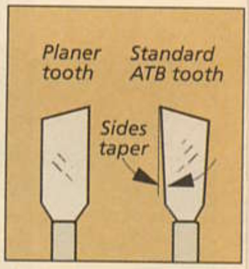

▲ *A planer-style tooth has less radial clearance than a standard ATB tooth. (Its sides aren't as tapered.) So the tooth has more contact with the wood and makes a very smooth cut.*

WHAT ABOUT THIN-KERF?

Both the ATB and the ATB&R blades are available in thin-kerf models. This type of blade cuts a 3/32" kerf instead of the 1/8" kerf of a standard blade. Since the blade is cutting a thinner kerf, it needs less power from the saw. If your saw is a little underpowered or you just want to give your saw a little more capacity, a thin-kerf blade might be a good idea. But thin-kerf blades are more likely to overheat, so a *Teflon* coating might be worth the extra cost.

Weekend Project

Desk Clock

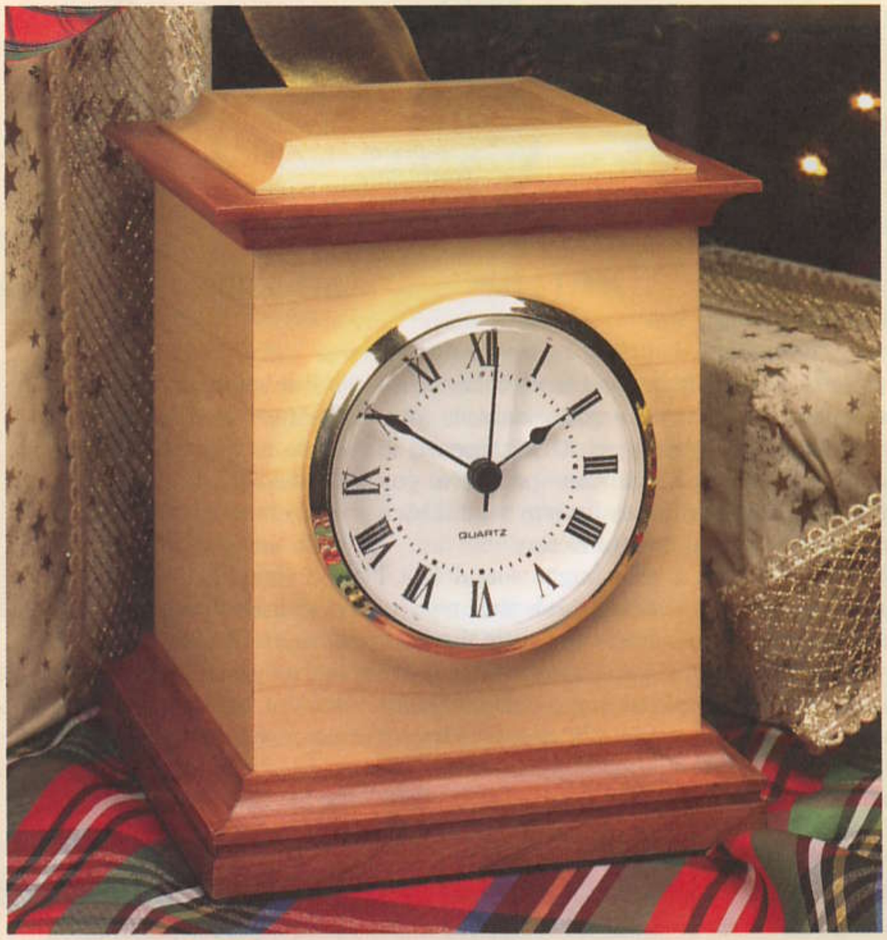

This may seem like an ordinary desk clock, but there's more to it than meets the eye.

More goes into this desk clock than you might expect — miter and spline joints, veneering, and template routing to name a few. All this, plus you can finish it in a weekend. And you can put one more thing into this project — the top lifts off to reveal a secret compartment.

CASE

The case of the clock is made of four identical sides joined with miters and splines. It also has two bottoms. One sits flush with the bottom of the case. The other bottom is positioned halfway up to form a shallow compartment under the top.

SIDES. To build the clock, I started with the sides. As you can see in the photo, the grain runs horizontally. I did this for two reasons. First, I wanted the grain to wrap around the case. More importantly, as the wood expands and contracts across the grain, the miter joints of the base molding won't open up.

To make the *sides (A)*, begin by ripping an extra-long piece of 3/4" stock to final width. Working with an extra-long piece is safer and means fewer passes over the table saw. So before mitering the blank to length, the first thing I did was cut a chamfer along one edge of the blank, as Fig. 2 shows. This simply relieves the sharp, top edge of the compartment, as you can see in Fig. 1.

With the chamfer cut, the next step is to cut a groove for the panel, as shown in Fig. 3. You'll need to sneak up on the depth of the groove

1

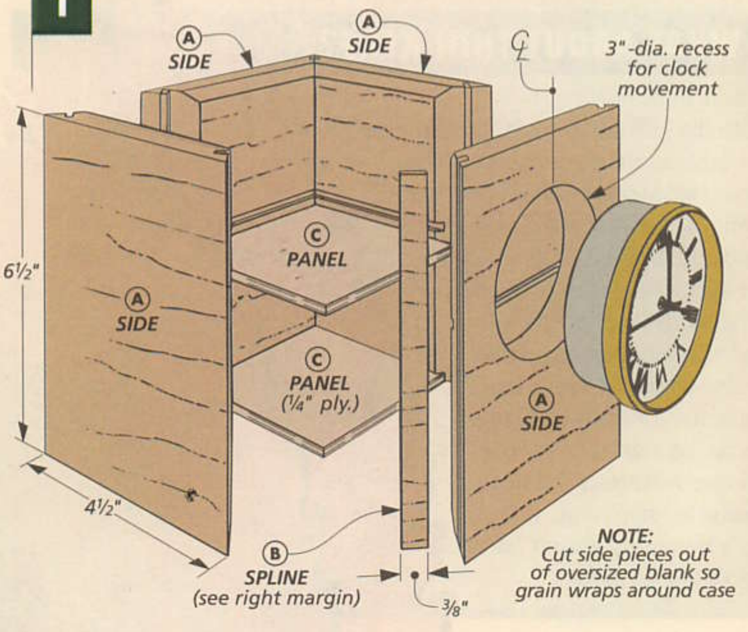

a.

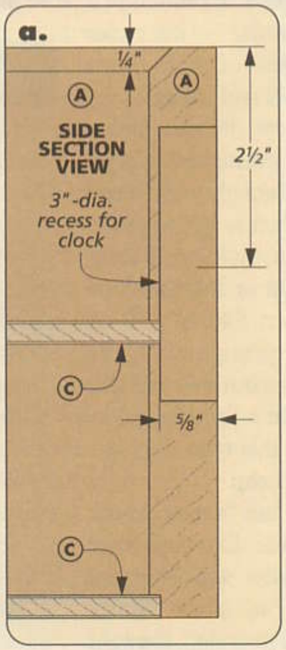

so the plywood panel will fit snug. The last thing to do on the oversized blank is to cut a rabbet sized to hold a ¼" plywood bottom, as in Fig. 3b. Again you'll want to do this in a few passes so the plywood sits flush with the bottom of the case.

MITER CUT. Now the sides can be cut from the blank. This will be a two-step process. And the important thing is that you try to allow as little waste between the pieces as possible. This way, the grain will look like it wraps around the case.

The first step is to miter the pieces to rough length. (I cut mine 4⅝" long.) Here, the blade should tilt away from the fence so the workpiece isn't trapped under the blade. Then, reposition the rip fence and cut the sides to final length (4½").

SPLINES. To strengthen the miters, I decided to add splines. Cutting the kerfs for the splines is easy. Since the blade is already set to 45° all you need to do is reposition the fence, as in Fig. 4. Then to cut the *splines (B)* safely, I used a two-pass method as indicated in the margin at right. The first thing to do is cut some kerfs in both edges of an oversized blank. Then lay the blank on its face and cut the splines to width.

CLOCK HOLE. With the sides nearly finished, choose one of the sides so you can cut the recess for the clock movement. As you can see in the lower margin photo, you could use a saw-tooth Forstner bit to do this, but

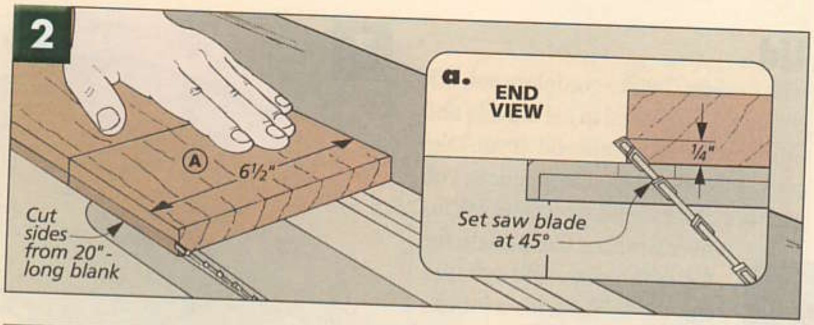

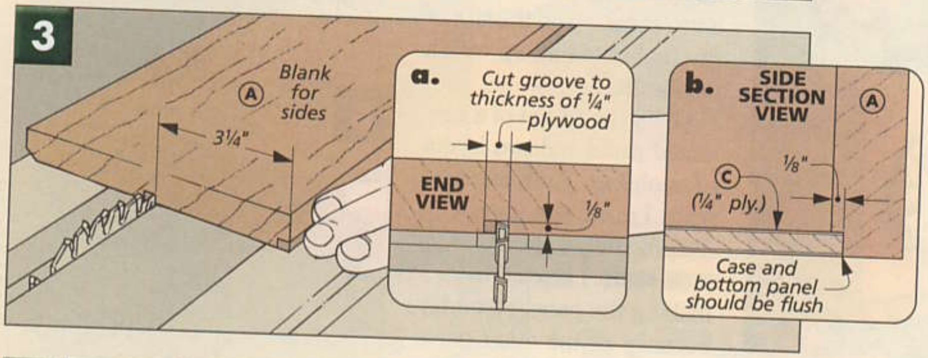

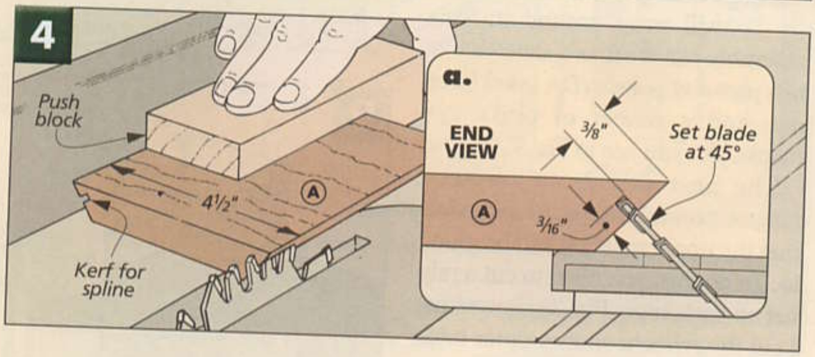

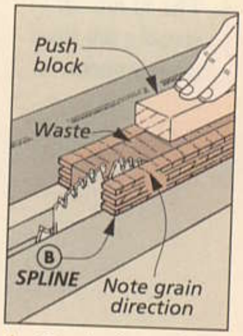

▲ *Cut kerfs on the edges of an oversized blank. Then lay the blank face down and cut the splines free.*

I used a router with a guide bushing and a hardboard template. For more information on making the template, turn to page 16.

With the template in hand, it can be attached to the workpiece with carpet tape. Because the hole is pretty deep (⅝"), you'll want to rout out the waste in a few passes, as in Fig. 5a. As you make the last pass, don't be surprised if you see the groove for the bottom. But don't worry, this won't affect the fit of the bottom or the clock movement.

The case is just about ready to be assembled. All that's left to do is cut two ¼" plywood *panels (C)* to fit the groove and rabbet.

ASSEMBLY. Gluing up the clock case isn't all that hard, but it does take a little work to get all the workpieces put together and the corners square. So I decided to use *Franklin's* Titebond Extended Wood Glue to give me extra time.

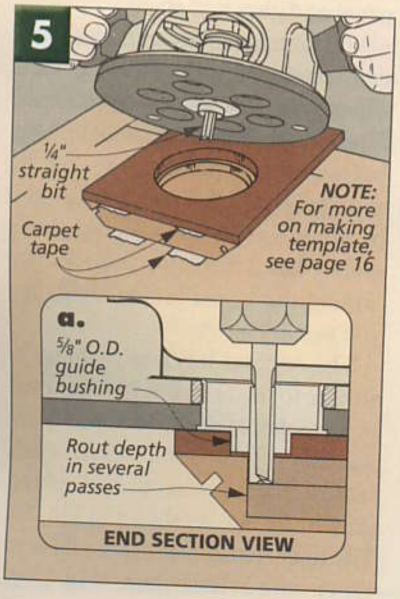

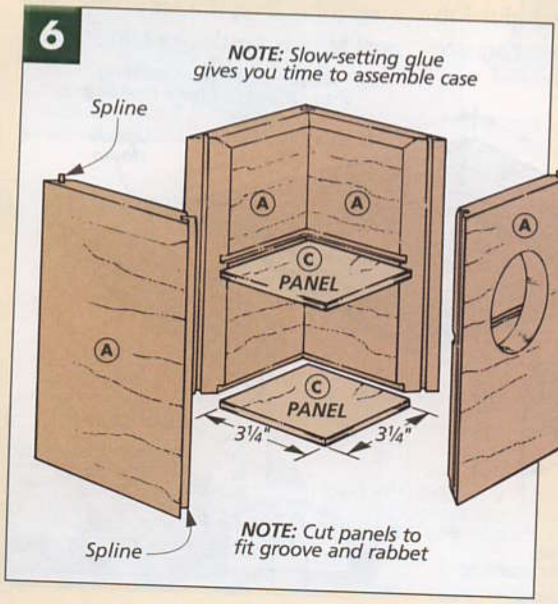

▲ *A Forstner-style bit makes quick work of drilling the hole for the clock movement.*

Lid

The case isn't quite complete yet, but for now, you'll need to set it aside and work on the removable lid. If you take a close look at the photo at left, you can see the reason why. The lid fits over a rabbet that's cut in the top of the case. And by building the lid first, it's a lot easier to sneak up on the size of the rabbet to end up with a perfect fit.

▲ *The lid lifts off to reveal a felt-lined compartment.*

I built the lid out of a laminated panel and two layers of molding. And for contrast, I made the lower molding out of cherry.

LID PANEL. I started by making the panel assembly because all the other parts will wrap around it. This assembly starts off as a sandwich of two plywood *panels (D)*, good faces out, and a veneer of bird's eye maple, like you see in Fig. 7.

The next step is to create a tongue around the panel assembly that the upper molding will be glued to. To do this, you need to cut a rabbet on each edge. Fig. 7a shows how I cut the rabbets on the router table using a straight bit and fence.

MOLDING. With the lid panel finished, you can begin making the molding pieces. As you can see in Fig. 8, these pieces are pretty small. If you tried to shape them individually, there wouldn't be much to hold on to. To get around this, each layer of molding is mitered and glued to the lid panel first. The larger square formed by the molding and lid creates a safe workpiece to handle on the router table, as Fig. 9 shows.

For the *upper molding (E)*, I cut a groove in an extra-long piece of maple stock on the table saw. The goal here is for the molding to end up flush with the lid panel, so you'll have to make several passes, testing for fit after each pass, as in Fig. 8a.

Now you are ready to miter the upper molding to fit around the lid panel and glue it in place.

With the upper layer in place, you can begin creating the profile. There are just two steps to this. First, I cut a shallow rabbet in the bottom of the molding, as Fig. 9a shows. This rabbet simply helps you position the lower molding that's added later. Second, rout a cove around the top of the molding, like you see in Fig. 9b.

The second layer of molding is similar to the first. But it's even easier to make. Like the first, the *lower molding (F)* starts off as a 3/4"-thick blank that's mitered and glued around the lid, as shown in Fig. 10. The final step in making the lid is to rout a cove in the bottom (Fig. 10a).

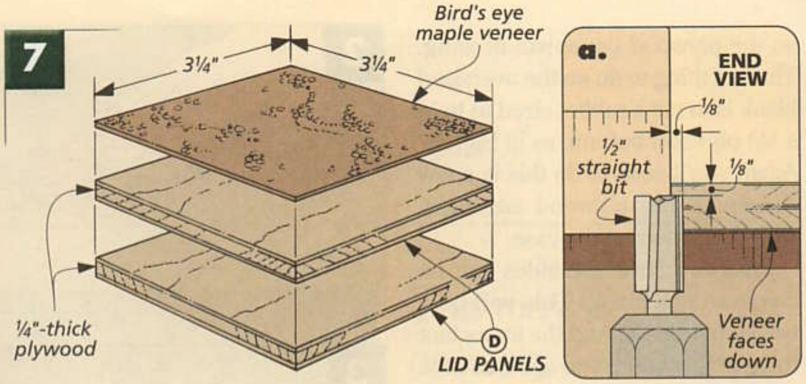

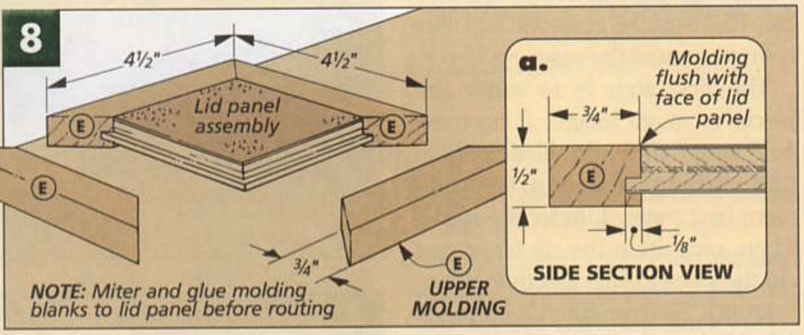

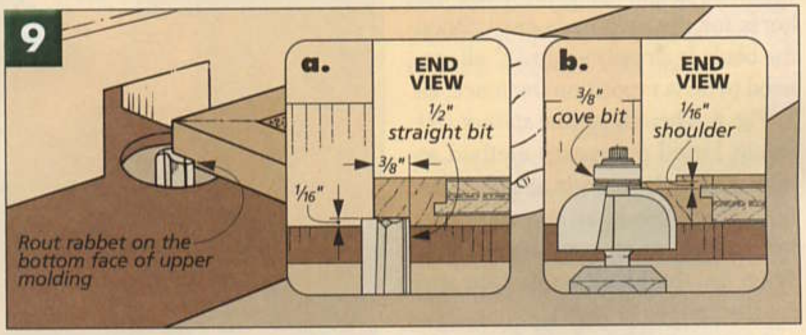

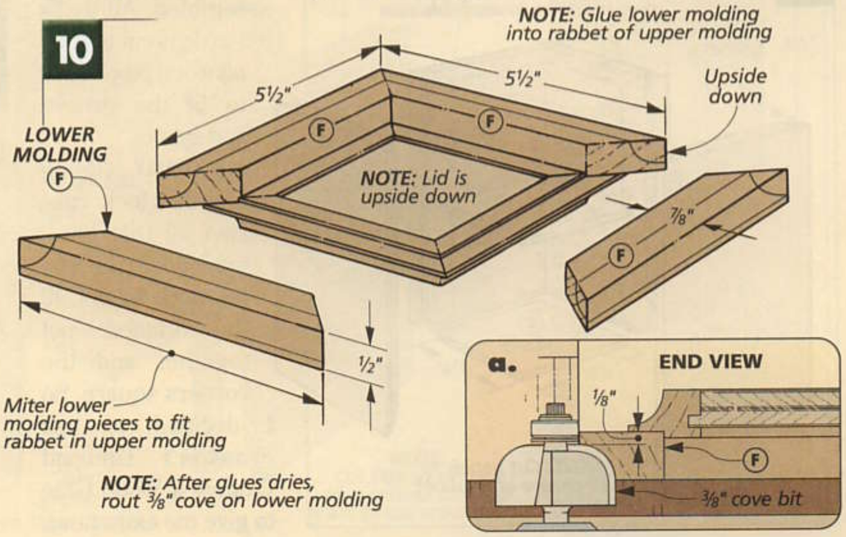

RABBET CASE. Although the lid is finished, it won't fit on the case — you still need to cut a rabbet on the case. By waiting until now to cut the rabbet, I was able to easily get a snug fit with the lid.

To cut the rabbet, I decided to use a straight bit in the router table, as shown in Figs. 11 and 11a. This way I could get smooth shoulders. I nibbled away until the lid just slipped over the rabbet, like in Fig 11b.

BASE MOLDING. Now that the rabbet has been cut in the top of the case, you can finish up by adding the contrasting cherry molding to the bottom, as in Fig.12. But because the final size of the pieces is small, it's safer to form them on an oversized blank.

There are only three steps to the *base molding (G)*. First, cut a kerf for a shadow line on the blank as shown in Fig. 12a. The second step is to route a cove on the router table leaving a slight shoulder between the cove and the shadow line you just made.

With the profile created, you can now rip the pieces to final width. Then miter them to fit around the case and glue the pieces in place.

FINAL DETAILS. Before inserting the clock into the recess, I gave the case a couple coats of finish and applied an adhesive-backed felt to the bottom. (For sources turn to page 35.)

And in order to dress up the compartment, I lined the inside with felt, as Fig. 13 shows. For more on this, turn to page 17. ■

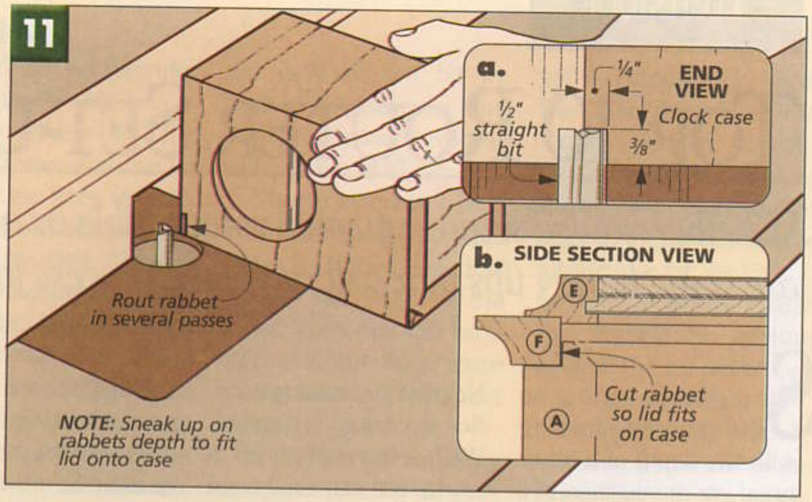

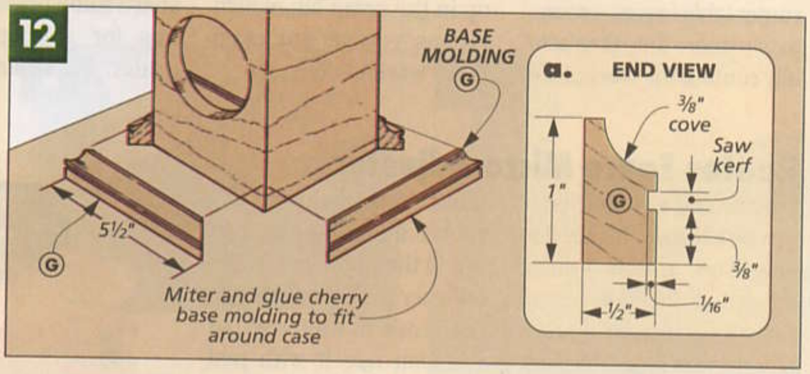

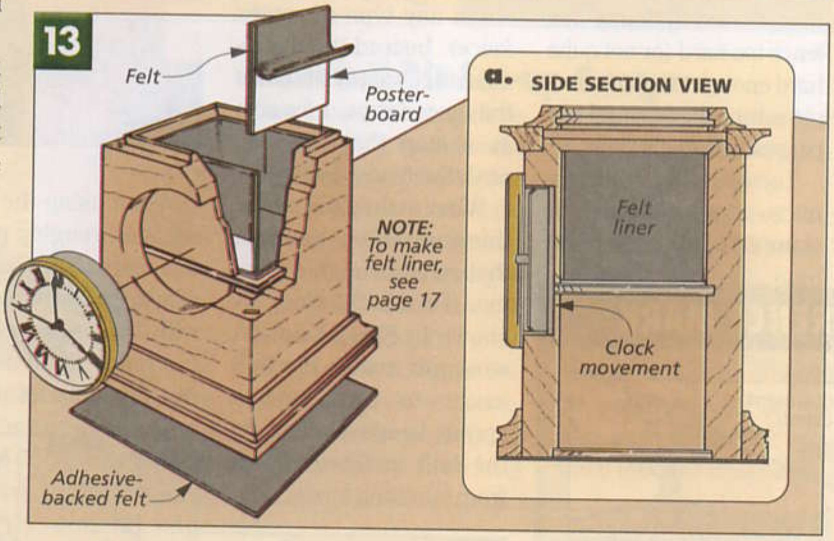

MATERIALS, SUPPLIES & CUTTING DIAGRAM

- **A** Sides (4) ¾ x 6½ - 4½
- **B** Splines (4) ⅛ x 6½ - ⅜
- **C** Case Panels (2) ¼ ply. - 3¼ x 3¼
- **D** Lid Panels (2) ¼ ply.- 3¼ x 3¼
- **E** Upper Molding (4) ½ x ¾ - 4½
- **F** Lower Molding (4) ½ x ⅞ - 5½
- **G** Base Molding (4) ½ x 1 - 5½
- Adhesive-backed Felt
- Posterboard
- 3½"-dia. Quartz Movement

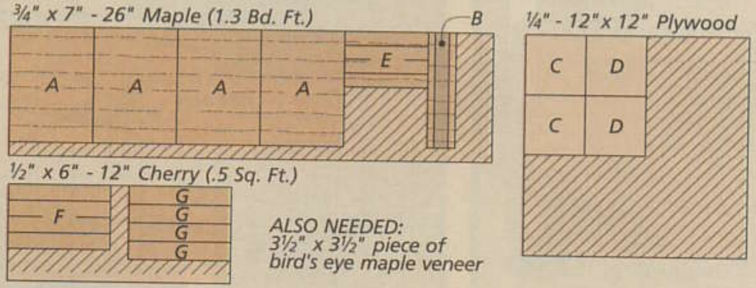

Top 10 Router Set-up Tips

Whether you're setting up your router table or a hand-held router, here are some handy tips that will make the process faster and more accurate.

Sometimes, setting up the router — fussing with the depth of a bit or tweaking the position of a router table fence — seems to take more time than actually routing the workpiece. Not that you want to sacrifice accuracy for speed. With a hurried setup, a workpiece can easily end up in the scrap bin, which means you've got even more work to do.

Still, there are shortcuts you can safely take that will make the process a lot quicker. So we decided to share some of our favorite tips for setting up the router. Whether you are performing a hand-held operation or have the router mounted in the table, these quick tips will help you speed up your setups — without adding to your scrap bin.

Router Fence Micro-Adjuster

Fine-tuning a router fence can be a hassle. It's hard to see how much you're adjusting the fence, and there's no measuring tape like there is on a table saw. Plus, it's easy to "bump" the fence too hard (or not quite hard enough) so that a simple setup takes several test passes before it's right.

To solve this, I made a micro-adjuster that can be clamped to the edge of the table top behind my router fence, as you can see in the photo here. The adjuster isn't connected to the fence in any way (so you can use it with just about any type of router fence). Instead the micro-adjuster simply pushes the fence forward (or acts as a stop that you can push the fence against).

What makes the whole thing work is a hex bolt that runs through a common T-nut in the block, as shown in Fig. 1 below. A wing nut makes the bolt easier to turn, and a spring keeps tension on the bolt and prevents it from vibrating loose.

When using the micro-adjuster, roughly position the fence and clamp the adjuster to the table. Then with the opposite end of the fence tightened, you can fine-tune its position by turning the adjuster. (If you need to back off the bolt, the fence will need to be pushed back against it.) Once the router fence is in the right position, simply clamp it down.

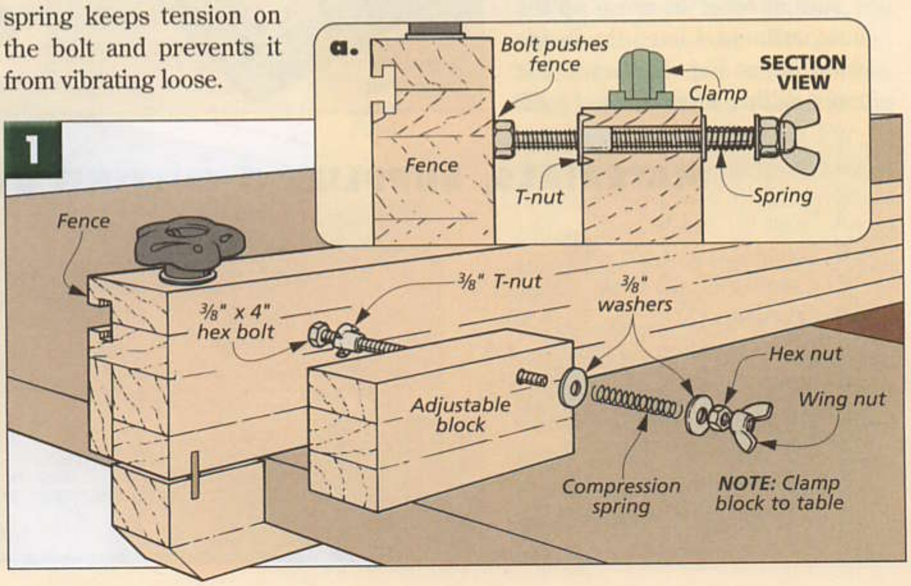

REFERENCE MARK

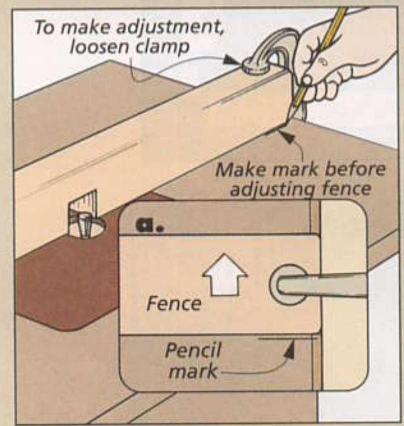

When fine-tuning the router fence, it's hard to see how much it's actually being moved. So to make the adjustments easy to see, I make a reference mark beside the fence.

Combination Square Setup

When it comes time to set up the router table, I've found a good combination square is the fastest and most accurate tool for getting the job done.

BIT HEIGHT. I start by setting the height of the bit. The combination square works best here because it sits flat against the top of the router table, as you can see in Fig. 1. Simply flush the edge of the ruler to the bottom edge of the handle. Then set the ruler next to the bit. It's best to get your eye level with the bit. This way, you can be sure its tip lines up with the mark on the ruler.

FENCE POSITION. Next, I work on setting the fence the right distance from the router bit. Here, a drill bit can come in handy, as in the margin photo at right. But a combination square will work well too. To use it, I measure to the *far* side of the bit by extending the ruler and setting it against the bit, as you can see in Fig. 2.

The trick here is to hold the square and rotate the bit so its cutting edge just "ticks" the edge of the ruler. Then you can carefully shift the router fence up against the ruler and tighten it down.

STOP BLOCK. If I'm making a stopped cut, I'll also use a combination square to set the stop block, as in Fig. 3. Set the ruler to the length needed. (Again this is to the far edge of the bit.) Now place the flat edge of the square handle against the bit. As before, the trick is to make sure the handle is resting against the tip of the cutting edge on the bit.

Clamp the stop block to the fence at the end of the ruler. Then make a test cut to check the setup.

▲ *A drill bit can make a handy gauge when it's time to set the router fence.*

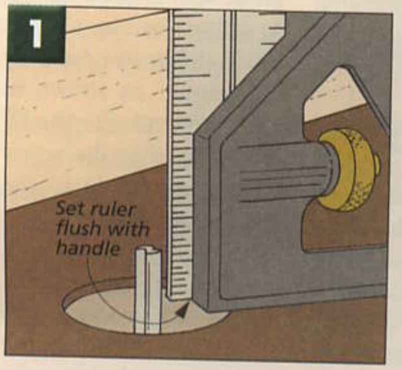

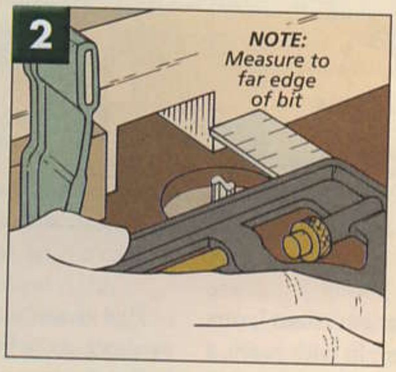

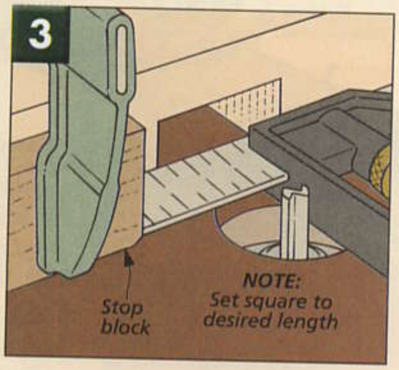

Chamfer Gauge

The router bits I tend to use most often are my chamfer and round-over bits. Whether I'm just relieving an edge (with the bits set 1/16" or 1/8" deep) or routing one that's more visible (1/4" or deeper), a lot of time is spent setting these bits.

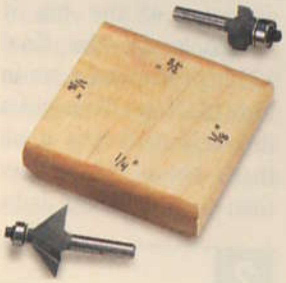

So to make a quick setup gauge, I started with a square block and routed different-sized chamfers around one face, as you can see in the photo above. Then on the opposite face, I routed several roundovers. (Label the sizes for quick reference.)

Now to set the bit, all you have to do is raise it until its cutting edge matches the profile on the set-up gauge, as you can see in Fig. 1 below.

Dovetail Bit Set-up Gauge

One trick to routing dovetails is setting the bit to the right height. If the bit is a hair too high or too low, the joint isn't going to fit properly. So the next time you have the dovetail bit set to the exact height, it's a good idea to make a simple setup gauge, as shown here.

To make my gauge, I started with an extra-long piece of hardwood and cut a small notch for the guide bushing, as in Fig. 1a.

Next, I mounted the blank in a vise and routed a wide dovetail notch across the block (Fig. 1b).

Now the next time you need to set up the dovetail bit, put the block on the base and raise the bit until it just touches the gauge.

▼ *A simple shop-built gauge will give you a head start when setting up a dovetail bit.*

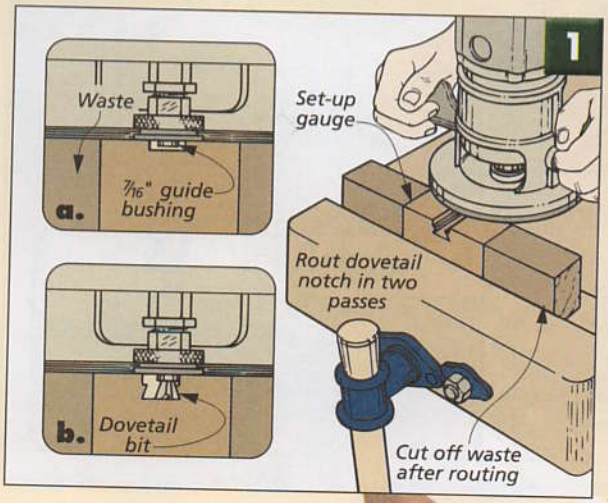

Depth Gauge

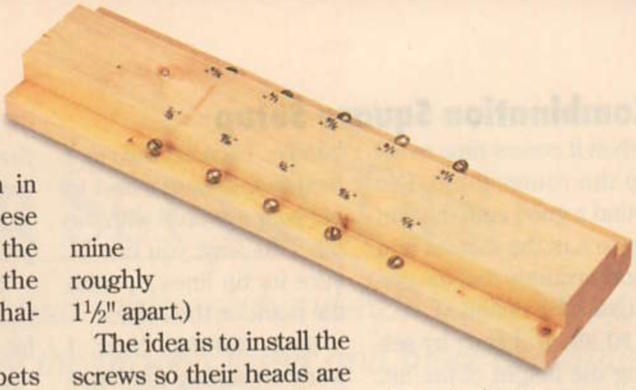

Getting the depth of a router bit set just right takes a bit of trial and error. But you can avoid this with the simple set-up gauge shown in the photo at right. It eliminates all the guesswork so you can set the depth of the router bit "dead on" — the first time.

This set-up gauge is made from a scrap 2x6 with rabbets cut along each edge, as shown in Fig. 1. (Note that these two rabbets aren't the exact same depth — the shallower one is for shallower bit settings.)

Once the two rabbets have been cut, all you have to do is add a series of roundhead brass screws to each side. (I spaced mine roughly 1½" apart.)

The idea is to install the screws so their heads are at different heights. Measuring from the top of the gauge, I "dialed in" the screws so they stepped down in 1/16" increments. (As you can see in the photo above, it's a good idea to label the screws so you can find the right depth quickly.)

With the gauge complete, setting the depth of a router bit is simple. Place the router base on the gauge, as shown in Fig. 1. Then lower the bit until it touches the screw that corresponds to the desired depth (Fig. 1a).

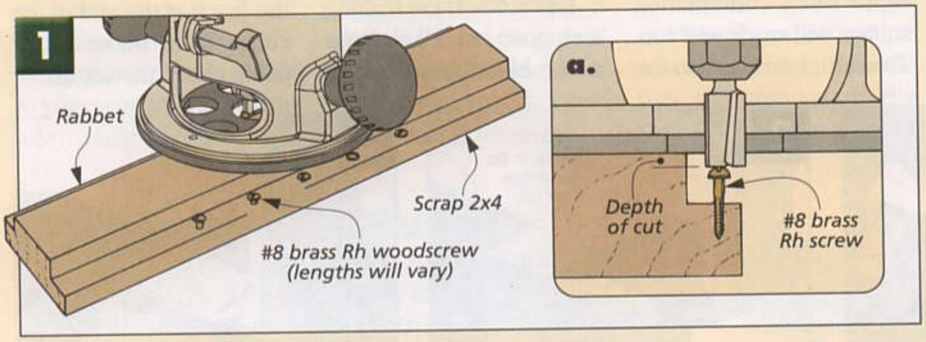

Spacer For Odd Sizes

When routing most dadoes and grooves with a straight bit, you don't have to worry about the width of the cut — it matches the diameter of the bit. But there are times when you need an "in between" size, like when the dado needs to hold a piece of plywood. And occasionally, you'll need a dado that's larger than your largest bit. In both cases, a spacer and a two-step method will help you create perfect-fitting dadoes. Plus, this method works for both a hand-held router (with a fence, as shown in Fig. 1) and the router table (with an auxiliary fence and stop block, as in Fig. 2).

This spacer can be long or short, as in Figs. 1 and 2. But the key is its thickness. When added to the diameter of the bit, it should equal the final width of the dado, as in Fig. 1a. Note: To avoid a thin spacer, I use a bit that's about 1/4" smaller than the width of the dado.

With the spacer cut to the correct thickness, the first thing to do is set the fence (Fig. 1) or the stop block (Fig. 2) and rout the first pass. Then slip the spacer between the fence and the router base or between the stop block and the workpiece and make the second pass.

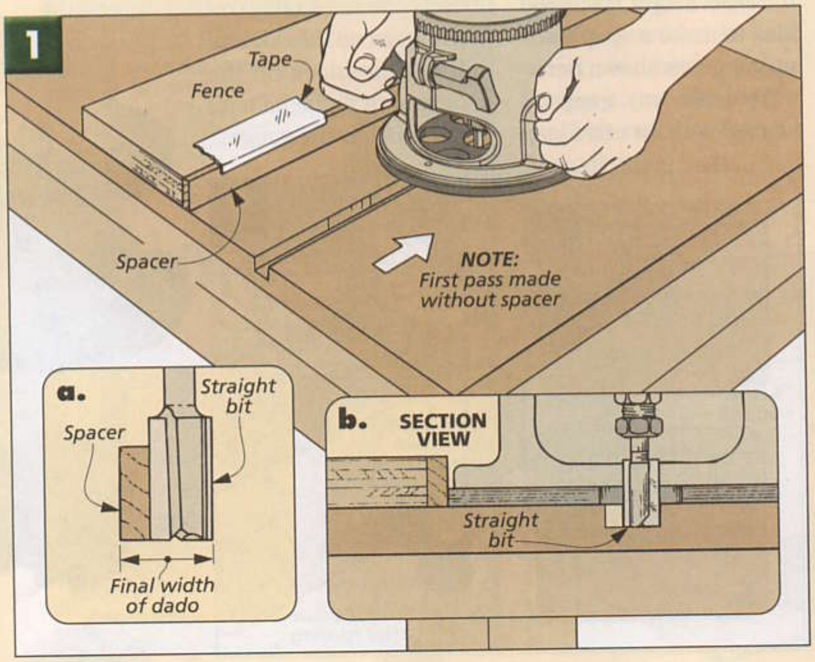

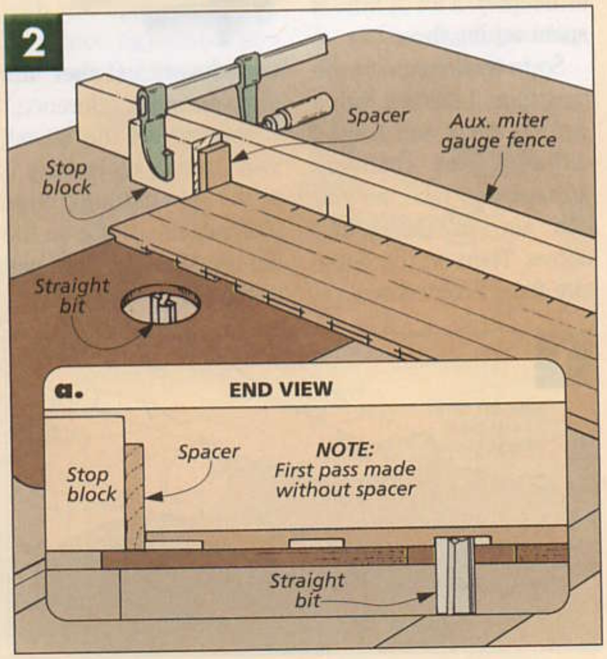

Centering With a V-Groove Bit

When cutting grooves, there are times when they need to be centered perfectly on the width of the workpiece. For instance, I've run into this when routing stopped grooves for drawer guides, as you can see in Fig. 1 at right.

In this case, trying to lay out a centered groove can be a real challenge — the numbers don't usually work out cleanly. Instead, I draw a centerline along the workpiece and use a simple two-step method for setting up the bit.

The first thing to do is to mount a V-groove bit in the router and raise it just about even with the table, as you can see in Fig. 1a. Since this bit comes to a point, it's easy to line it up accurately with the centerline on the workpiece.

With the fence in position, the V-groove bit can be replaced with the straight bit you plan to use to rout the grooves, as in Fig. 1b. (Remember not to adjust the router fence.) Now you're ready to rout the groove in the piece.

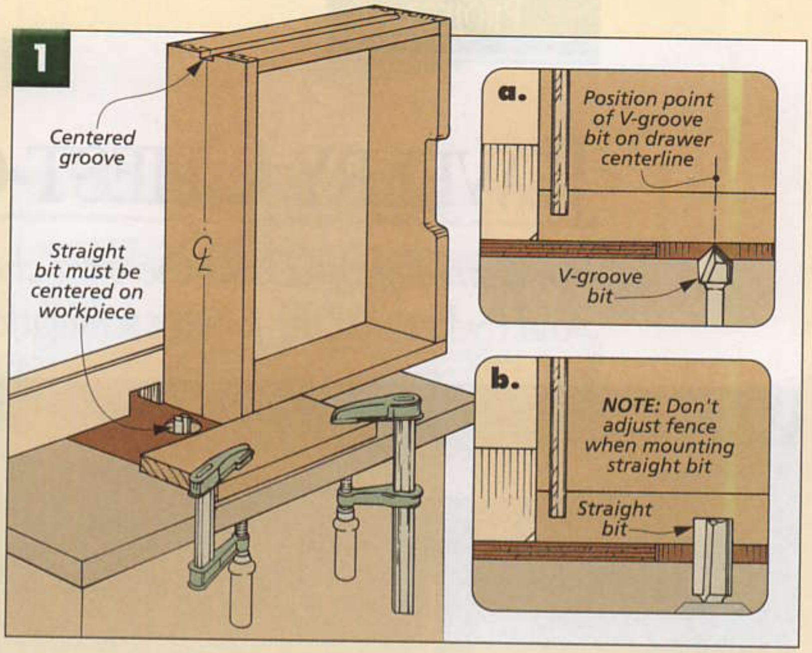

Deep Grooves & Dadoes

When routing, I don't like to remove more than 1/4" of material with each pass. So if there's a deep groove or dado to rout, it has to be done in two or more passes.

The problem with this is that raising the bit between passes can cause you problems. With non-plunge routers, you will usually have some play in the height adjustment mechanism. This means that each time the height is changed, the bit isn't in the exact same position it was before. So the groove can end up with one or more steps, as you can see in the photo at right.

The good news is, you don't have to buy a plunge router. Instead of changing the height of the bit, change the height of the workpiece. To do this, I set the bit to cut the full depth of the groove. Then I use a 1/4"-thick spacer to "raise" the workpiece, as shown in Fig. 1.

My spacer is 1/4" hardboard with a clearance opening cut for the bit. And to make it easy to secure, I added a hardwood cleat to each end.

Now with the spacer in place, the first pass will be a shallow one (Fig. 1a.) Then to make the full depth of cut, just remove the spacer and take another pass (Fig. 1b). W

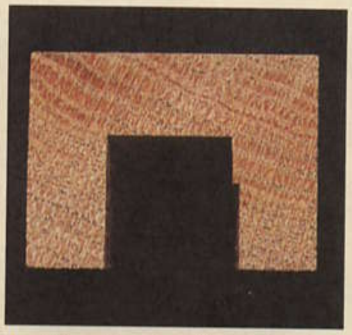

▲ *After changing the height of a bit, some routers may leave a small step.*

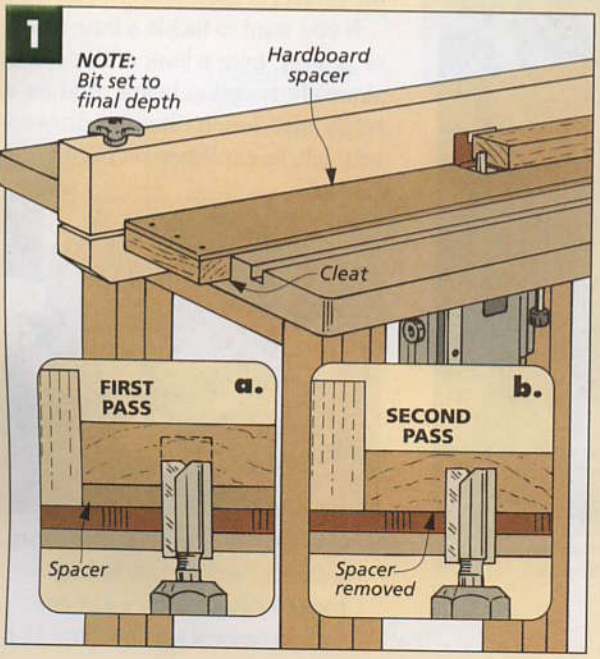

HAND-HELD GROOVES & DADOES

When making deep cuts with a hand-held router, you can end up with the same "steps" as you do on a router table, see photo above. But the solution is also the same.

Again, the bit starts out at full depth, as in Fig. 1. Then I carpet-tape one or more auxiliary base plates to the bottom of the router. (I have two 1/8" hardboard plates and a thinner plastic laminate plate.) After each pass, you take off one of the plates. Then when the laminate is removed, you'll end up with a final skim pass that leaves a clean cut.

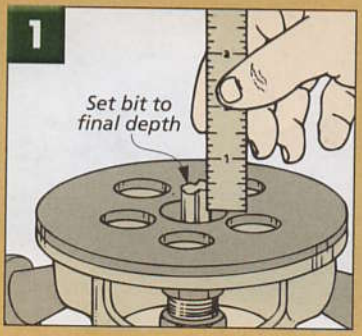

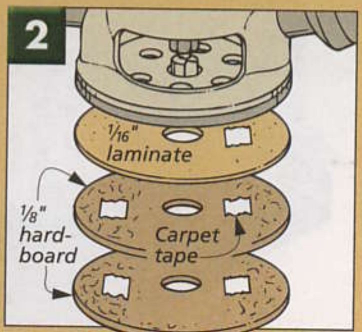

HEIRLOOM PROJECT

JEWELRY CHEST-ON-CHEST

For a small project, this chest-on-chest makes a big impression. And by keeping the joinery straightforward, it's easy to build.

Everybody has at least a few small treasures that deserve to be kept in a special place. Maybe it's your grandfather's pocket watch or your mother's pearl necklace. Whatever your treasures might be, this chest-on-chest will store them in style.

You might say this project is a classic design in a small package. All of the proportions and details of a full-size chest-on-chest have been designed into this piece. But the nice thing is that it's not nearly as much work to build. The joinery is nothing fancy or complicated — the chests are held together with rabbets, dadoes, and glue. Plus, the upper and lower chests and the base are all built separately and then assembled afterward.

Sure there are a lot of drawers, but they go together pretty fast — again with just rabbets and glue. The only problem they'll give you is deciding what to put in them when the project is done.

If you want to tackle a little quicker project, take a look at the stand-alone chest option below. And for a really nice touch, line the drawers with felt, as explained on page 17.

▲ *You don't have to build both chests to end up with a great-looking project. Just build the lower one with an optional top. (See page 31.)*

Construction Details

OVERALL DIMENSIONS:
16⅛"H x 9¾"W x 6"D

NOTE: *For complete materials and supplies list, see page 34*

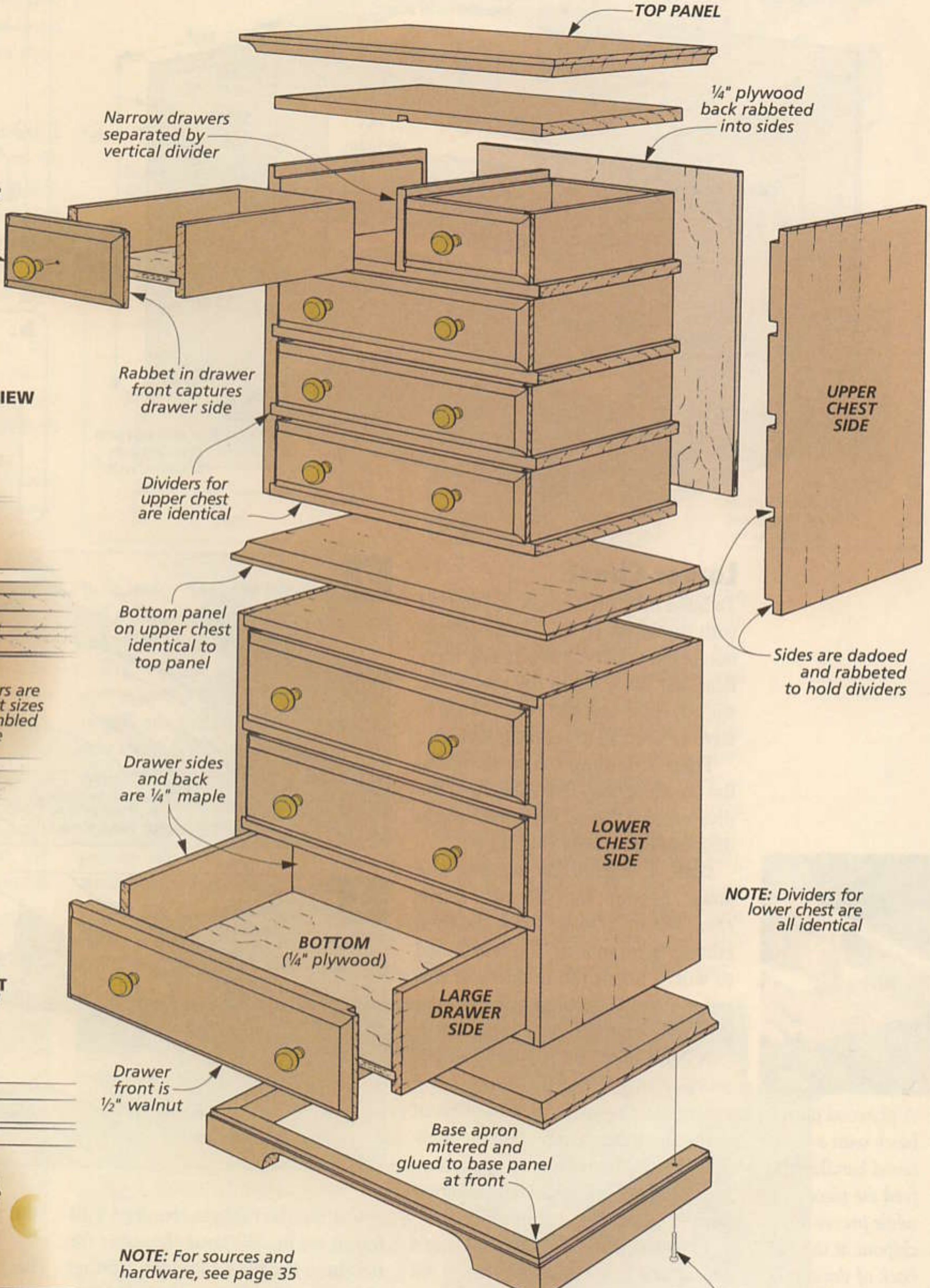

SIDE SECTION VIEW

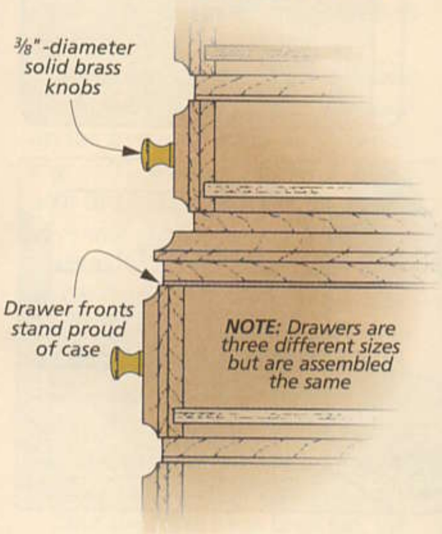

LOWER CHEST FRONT VIEW

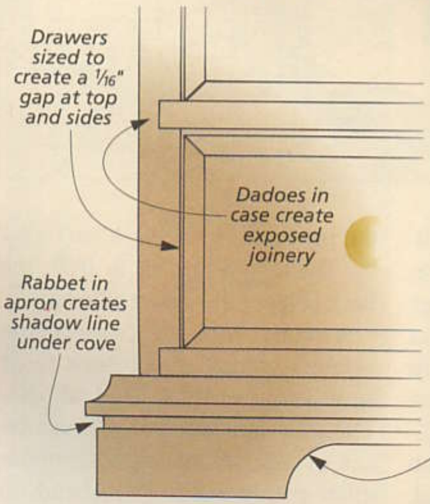

NOTE: *For sources and hardware, see page 35*

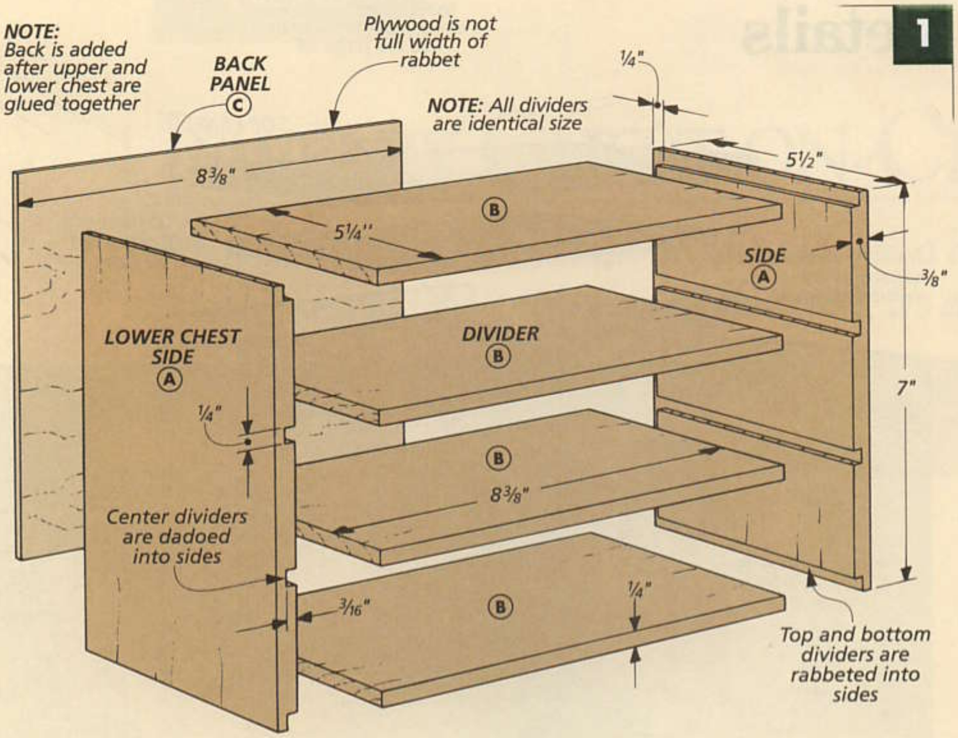

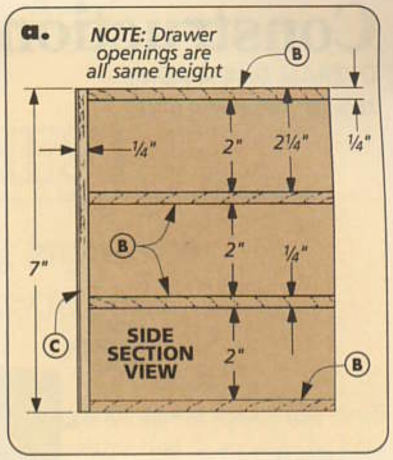

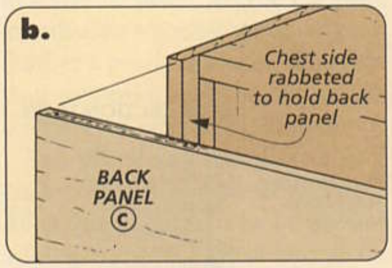

Lower Chest

To build this chest-on-chest, I started with the lower chest. The construction of the upper chest is nearly identical, but the sizes of the pieces are slightly different, and I didn't want to have to keep all those parts straight.

There's nothing too tricky about the construction. The sides hold the dividers and the ¼" plywood back in dadoes and rabbets (Fig. 1).

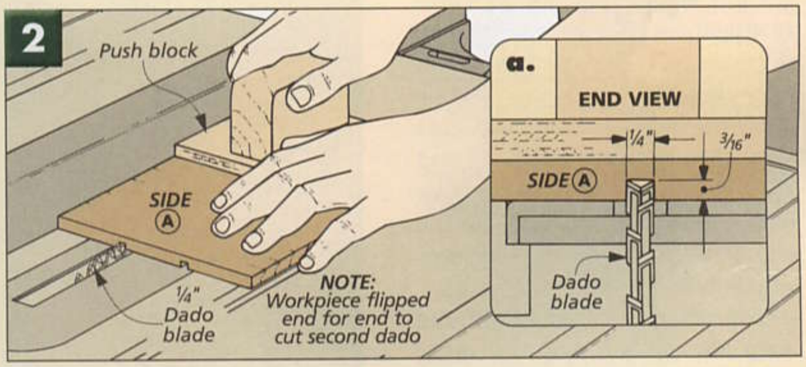

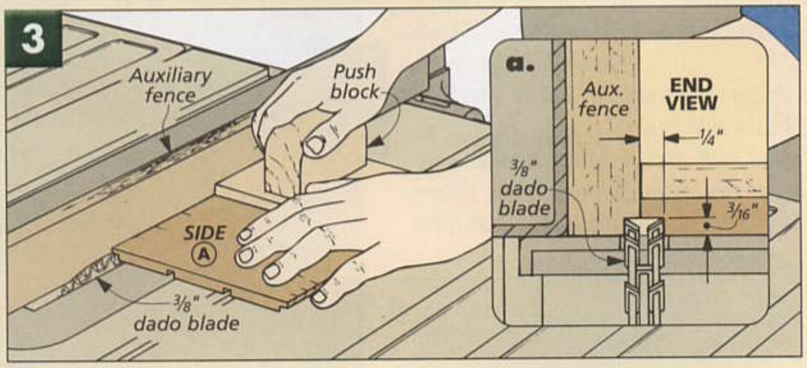

SIDES. I started by planing the stock needed for the two *lower chest sides (A)* to ⅜" thick and then cutting them to size. You don't need to worry about the dividers at this point. They'll be planed later to fit the dadoes and rabbets in the sides.

▲ *A plywood push block with a hardwood handle helps feed the pieces, while preventing chipout at the back of the cut.*

A dado blade on the table saw is an easy way to cut the dadoes and rabbets in the sides. But in place of using the miter gauge with an auxiliary fence, I made a simple push block to help guide the cuts and prevent chipout. (See left margin.)

I started with the dadoes. What's important here is the spacing. All the drawer openings should end up the same size, as in Fig. 1a. And this isn't difficult to do. Just mark the dadoes on the sides carefully and then set the rip fence. Now all that's left is to cut the dadoes, flipping the pieces end-for-end between passes.

Cutting the rabbets required a different set up. Without changing the height of the blade, I added another chipper to the dado and buried it in an auxiliary fence. Then sneak up on the rabbets until they're the same width as the dadoes (Fig. 3a).

The last thing to do is to cut the rabbets for the plywood back panel, as shown in Fig. 1b. Don't worry if the plywood for the back isn't a full ¼" thick. It'll just sit in from the back edge of the case a little bit.

DIVIDERS. Now to connect the sides, I planed some stock to fit snug into the dadoes and rabbets. Then the four *dividers (B)* can be cut to size. A stop block on the miter gauge will help you end up with four identical pieces.

GLUE UP. Before assembling the chest, I cut the *back panel (C)* to size. For now, it helps hold the pieces square. But don't glue it in place just yet. You'll need to fit some clamps through the back opening later on.

BASE

With the lower chest assembled, I began work on the base it rests on. As you can see in Fig. 4, the base is just a solid wood panel that overhangs a narrow apron. A cove on the panel, a small shadow line on the apron, and a simple cutout in the front all give the base its traditional look.

BASE PANEL. I started by cutting the 3/8"-thick *base panel (D)* to size. It should overhang the lower chest 1/2" on the front and sides and fit flush at the back, as in Figs. 4a and 4c.

After the top is sized, all that needs to be done is to rout the cove on the front and ends, as shown in Fig. 5. To minimize chipout, start with the ends and sneak up on the cove with shallow passes (Fig. 5a).

APRON. With the base panel complete, I turned to the apron. The *apron front (E)* and *sides (F)* start out as one extra-long blank of 1/2"-thick stock that's ripped to final width. (It's easiest to cut the rabbet for the shadow line in one long blank, as indicated in Fig. 4b.)

After the rabbet has been cut, the apron pieces can be mitered and cut to fit under the base panel, leaving a 1/8" overhang at the front and sides, as you can see in Fig. 4a.

The cutout in the front of the apron is the final detail (Fig. 4a). I rough cut the contour using a narrow blade on the band saw and then cleaned up the cut with a small sanding drum on the drill press.

BASE ASSEMBLY. Now that all the pieces are cut, the apron can be added to the base panel. I started by gluing the front of the apron to the panel (Fig. 4a). Attaching the apron sides isn't as straightforward. The sides of the apron run across the grain of the top. So the goal is to attach the apron sides while still allowing the panel to expand and contract with changes in humidity.

To do this, I spread glue on the mitered ends and a couple inches back along the top edges. Then at the back end I installed a screw through an oversized hole (Fig. 4c).

With the base assembly finished, it can be glued to the lower case (Fig. 4a). If you let the glue "tack up" just a bit before clamping, the pieces won't slide out of alignment.

4

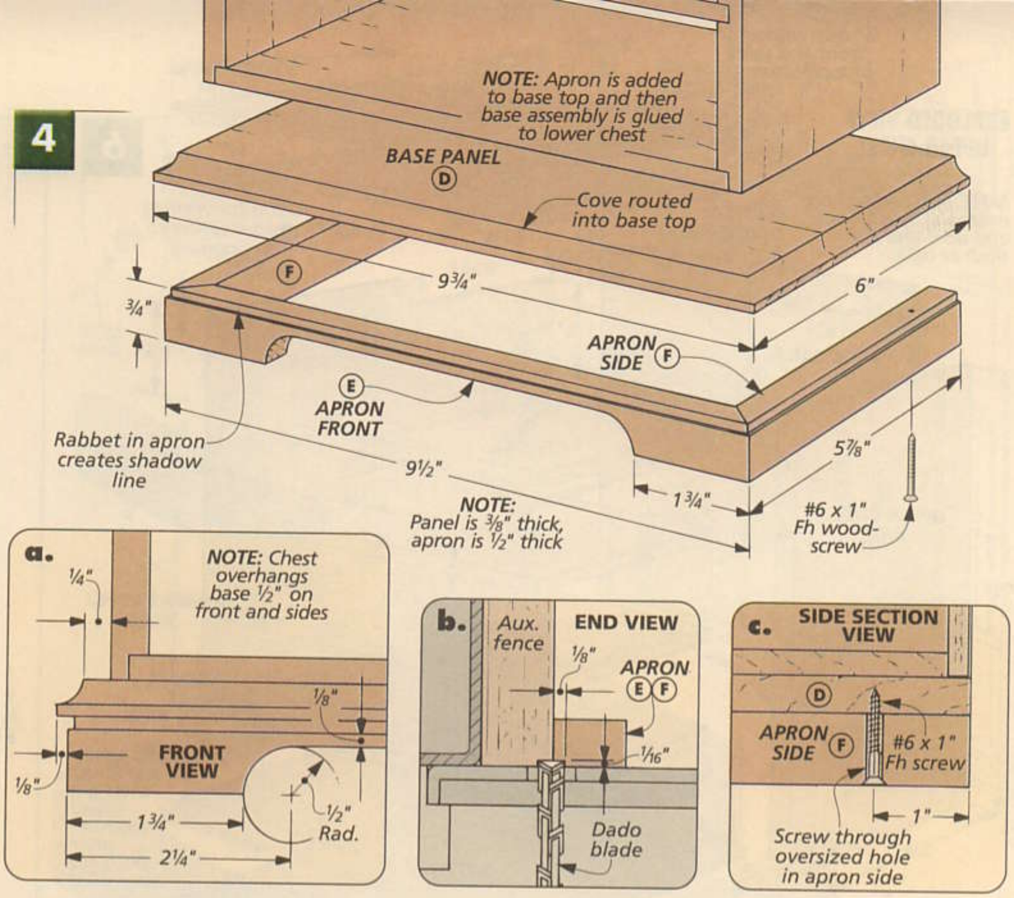

5

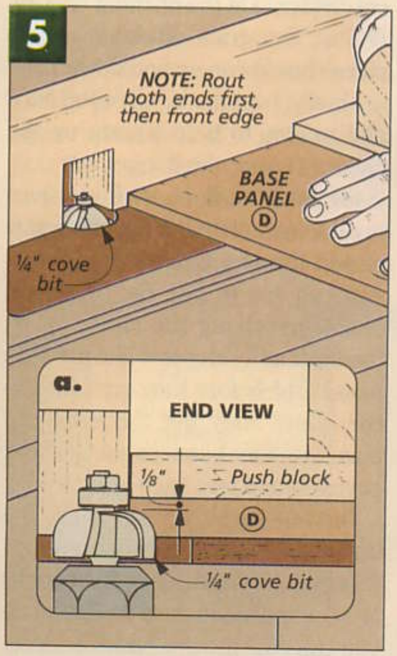

SINGLE CHEST OPTION

Instead of a full chest-on-chest, you can build a shorter three-drawer chest, as you can see in the photo. This is just the lower chest with an optional top added.

The top that completes this chest is identical to the base panel (D). After the base is built and glued to the case, the top is added, but with the cove facing down. It's positioned on the chest just like the base: flush at the back and centered side-to-side.

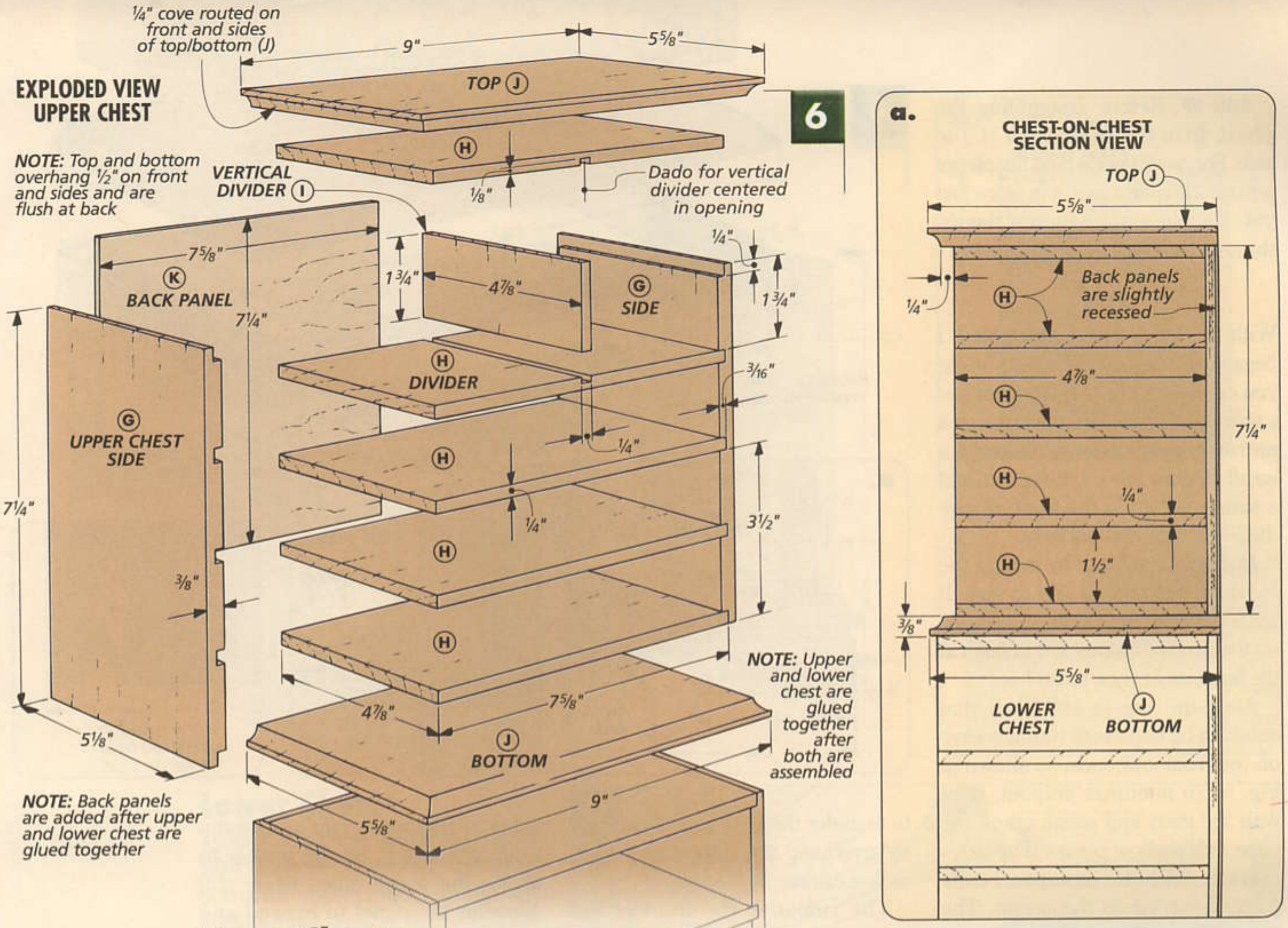

Upper Chest

With the lower chest complete, I built the upper chest next. Its construction is similar, but there are a few differences. The upper chest has five dividers, and there's a vertical divider that's fitted into the top opening to create a space for two small drawers.

SIDES. Just like the lower chest, I started by cutting the two *sides (G)* to size, as in Fig. 6. After these panels are cut, you can cut the two outside dadoes with the same technique you used for the lower chest.

But, the center dadoes are a little different. To cut these, I first marked the top end of each side. Then after carefully setting the fence, both of the panels were run through the saw with the top edge against the fence (Fig. 7). This way, even if the cut is a little off center, the divider will still be level. To complete the sides, the rabbets were cut using the same setup as before.

DIVIDERS. With the dadoes and rabbets cut in the sides, you can plane the stock for the five *dividers (H)* and cut them to size. As you can see in Fig. 6, the top two dividers still need a little more work. They hold the vertical divider, so you'll need to cut a couple of ⅛"-deep dadoes. This is just another centered dado, so you can use the same method you used for the middle divider.

After these two dadoes are cut, the *vertical divider (I)* can be sized. To do this, I dry assembled the sides and dividers and cut the vertical divider to fit the opening (Fig. 6). (Note: The grain direction of this piece should run up and down.)

Finally, I cut the ¼" plywood *back (K)* to size to help square up the chest as it was glued together.

TOP AND BOTTOM. Now all you need to do to complete the upper chest is to add the *top* and *bottom (J)*. As you can see in Fig. 6a, these two panels overhang the chest ½" on the front and sides just like the base panel. But before they are glued to the chest, they get the same ¼" cove as the base panel. (These coves should face each other.)

CHEST-ON-CHEST. At this point, the upper and lower chests can be glued together (Fig. 6a). Since their backs are open, this is easy to do. Then you can glue the two backs in place.

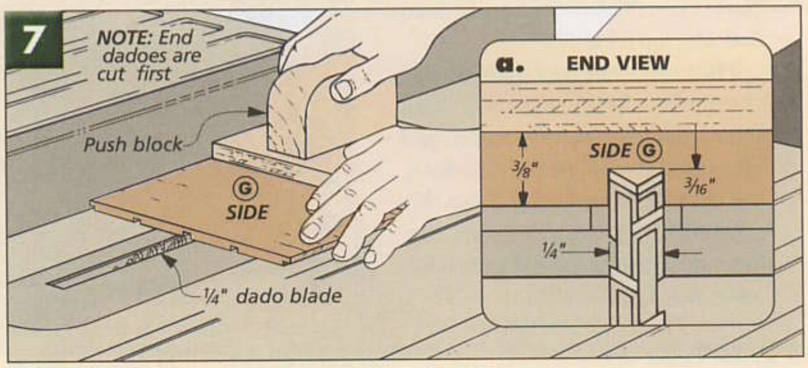

Drawers

To finish the chest, I needed to build eight drawers. Fortunately, the construction is pretty simple. The fronts are rabbeted to hold the sides, and the sides are rabbeted to hold the backs. To avoid working with too many pieces at the one time, I built the upper and lower drawers separately.

The drawers are sized to fit their openings with a 1/16" clearance side-to-side and top-to-bottom. What I like is how the drawers sit proud of the chest allowing a small cove to be cut into the drawer fronts (Fig. 8a).

BOTTOM DRAWERS. First, I cut the 1/2"-thick *drawer fronts (L)* to size, as shown in Figs. 8 and 8a. Then the *sides (M)* and *backs (N)* were cut from 1/4"-thick maple to provide a contrast with the darker fronts.

After these pieces are cut to size, the rabbets can be cut in the fronts and the *back* ends of the sides. As you can see in Figs. 8a and 8b, the width of these rabbets is the same, but the depth is a little different.

Next, you can cut the 1/8"-deep grooves for the drawer bottoms. Since the plywood for the drawer bottoms isn't quite a full 1/4" thick, just use a standard blade on the table saw and make a couple passes (Fig. 9). After the *bottoms (O)* are cut, the drawers can be glued up.

To complete the drawers, the cove needs to be routed on the fronts. I waited until now for a couple reasons. First, there's more to hold onto with the drawers assembled, as shown in Fig. 10. Second, you can sneak up on the cut to get the right fit at the front of the chest (Fig. 8a).

To rout the coves, I started with one end and then worked around the three remaining sides. Make shallow passes and work up to the final depth (Fig. 10a). This should help prevent any chipout.

UPPER DRAWERS. The final job is to build the upper drawers. And here, only the sizes are different.

When all the drawers have been built, the pilot holes for the 3/8"-dia. brass knobs can be drilled. But you'll want to wait to install them until after the shellac finish is applied, as explained on page 34.

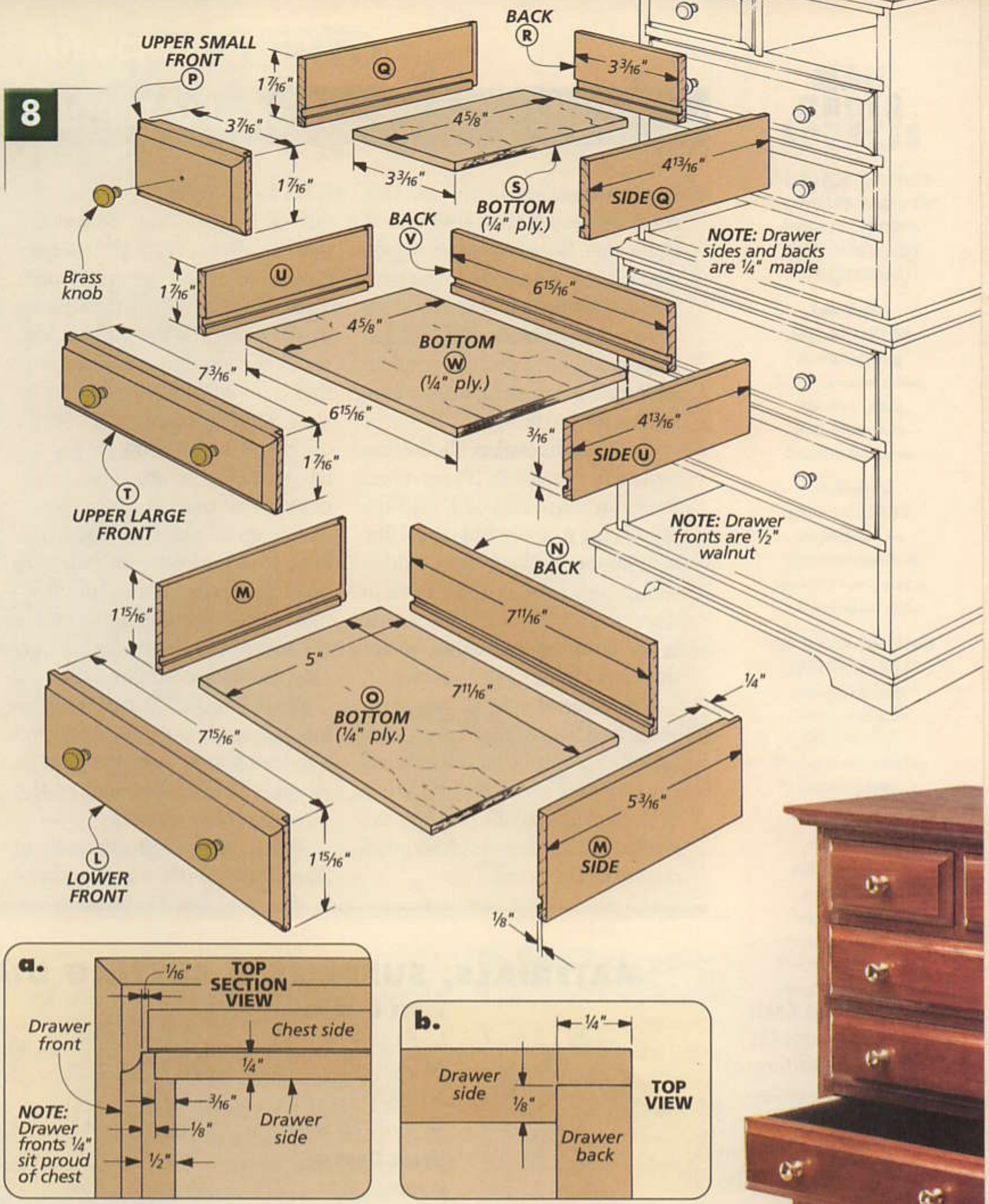

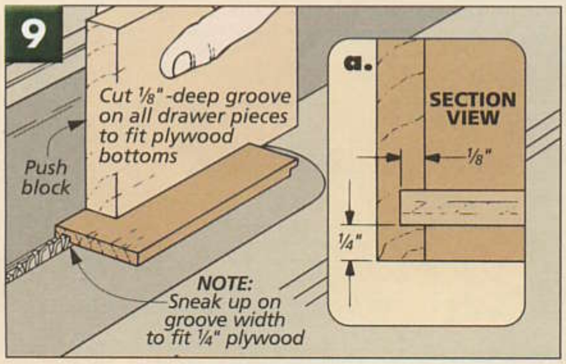

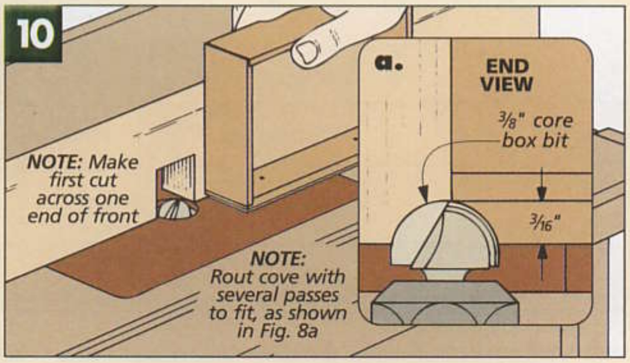

▲ *To find out how to line the drawers with felt, turn to page 17.*

SHELLAC FINISH

The walnut that I used for this chest-on-chest looked really great. But walnut, like a lot of other woods, changes color as it ages. You have to wait a while before it turns that warm, reddish-brown walnut color. I wanted to have that aged walnut look right away, so I chose orange shellac for the finish.

On the right project shellac can be a really nice finish. It's non-toxic, the odor's not too bad, and it's pretty easy to apply. But what I like best about shellac is that it dries really fast, so you don't have to worry too much about dust. Shellac is not the "toughest" finish, but for this project that's not a problem.

A number of paint or hardware stores sell both orange (also called "amber") and clear shellac in small cans. You will also need a small can of denatured alcohol to thin the shellac and for cleanup, plus a good-quality bristle brush.

Chances are that the shellac you buy will be a 3 lb. "cut." This means that 3 pounds of dry shellac have been mixed with 1 gallon of alcohol. This "cut" is a bit thick to brush on easily, so the first thing I do is pour some shellac into a glass jar and thin it about 50% with denatured alcohol. (This makes it a 2 lb. "cut.")

The trick to a good shellac finish is in the brushing. The shellac can start to "tack up" almost immediately after it's brushed on, so use long brush strokes in only one direction with a minimum of rebrushing. If you find that you're getting brush or lap marks, try thinning the shellac a little more.

For this project, I started at the top and worked down. And I left the drawer sides and backs unfinished. (The shellac makes the maple look too orange.)

After the first coat is dry (in about 30 minutes if it's warm and the

humidity is low), sand lightly with 220-grit sandpaper. You should see light dust on the surface of the wood. If the shellac "gums" up the sandpaper, let it dry a little longer. Two more coats with a little sanding in between, and the finish will have a nice "build." If you want to cut the gloss of the shellac a little bit, apply a coat of paste wax. W

MATERIALS, SUPPLIES & CUTTING DIAGRAM

LOWER CHEST

A	Sides (2)	3/8 x 5 1/2 - 7
B	Dividers (4)	1/4 x 5 1/4 - 8 3/8
C	Back Panel (1)	1/4 ply. - 7 x 8 3/8
D	Base Panel (1)	3/8 x 6 - 9 3/4
E	Apron Front (1)	1/2 x 3/4 - 9 1/2
F	Apron Sides (2)	1/2 x 3/4 - 5 7/8

UPPER CHEST

G	Sides (2)	3/8 x 5 1/8 - 7 1/4
H	Dividers (5)	1/4 x 4 7/8 - 7 5/8
I	Vertical Divider (1)	1/4 x 4 7/8 - 1 3/4
J	Top/Bottom (2)	3/8 x 5 5/8 - 9
K	Back Panel (1)	1/4 ply. - 7 1/4 x 7 5/8

LOWER DRAWERS

L	Fronts (3)	1/2 x 1 15/16 - 7 15/16
M	Sides (6)	1/4 x 1 15/16 - 5 3/16
N	Backs (3)	1/4 x 1 15/16 - 7 11/16
O	Bottoms (3)	1/4 ply. - 7 11/16 x 5

UPPER DRAWERS

P	Small Fronts (2)	1/2 x 1 7/16 - 3 7/16
Q	Small Sides (4)	1/4 x 1 7/16 - 4 13/16
R	Small Backs (2)	1/4 x 1 7/16 - 3 3/16
S	Small Bottoms (2)	1/4 ply. - 3 3/16 x 4 5/8
T	Lg. Fronts (3)	1/2 x 1 7/16 - 7 3/16
U	Lg. Sides (6)	1/4 x 1 7/16 - 4 13/16
V	Lg. Backs (3)	1/4 x 1 7/16 - 6 15/16
W	Lg. Bottoms (3)	1/4 ply. - 6 15/16 x 4 5/8

- (2) #6 x1" Fh Woodscrews
- (14) 3/8"-dia. Brass Knobs
- (3) 12" x 24" Adhesive-backed Felt
- Posterboard

1/4" - 24" x 24" Walnut Plywood

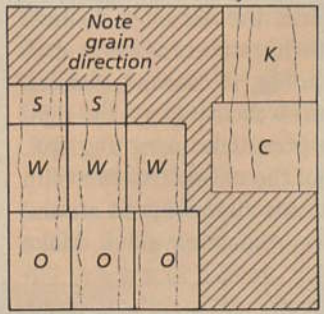

3/8" x 7" - 60" Walnut (2.9 Sq. Ft.)

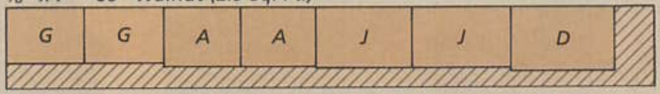

1/4" x 6" - 60" Maple (2.5 Sq. Ft.)

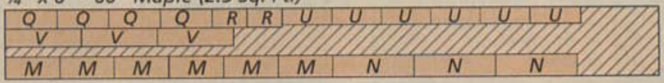

1/4" x 6" - 84" Walnut (3.5 Sq. Ft.)

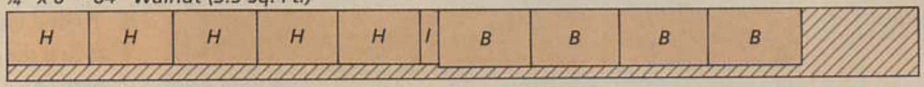

1/2" x 6" - 36" Walnut (1.5 Sq. Ft.)

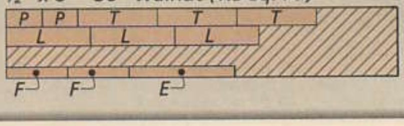

Sources

Modular File Cabinets

To build the file cabinet, you need some fairly common hardware. Most of it will be available at home centers and woodworking stores, but there are mail order sources as well.

DRAWER SLIDES. The "big ticket" item is going to be the drawer slides. I chose 22" heavy-duty, over-travel *Accuride* slides. ("Over-travel" means the drawer opens past the case.) I purchased mine from *Rockler* (89773), but you can probably special order them through a home center.

However, the "over-travel" feature is optional. Heavy-duty *full-extension* slides would work fine (and save you a little money).

For the desk's pencil drawer, all you need is a pair of 18" full-extension slides (*Rockler* - 32490).

HARDWARE. The only other items you'll need (besides screws and washers) are threaded inserts and bin-style pulls. The inserts are readily available. The bin-style pulls were ordered from *Van Dyke's Restorers* (AJ-02012708), but similar pulls are available through other sources.

THREADED INSERT DRIVER. To install the threaded inserts that join the cases, I used a simple driver that chucks into a hand drill. Mine was purchased from *Rockler* (30174), but *McFeely's* also has a driver available.

Desk Clock

There's not much hardware to purchase for the clock on page 20. All you need is a movement and some adhesive-backed felt.

CLOCK MOVEMENT. The movement you'll need is a $3\frac{1}{2}$"-dia. quartz, "press-in" movement. (Ours has a brass bezel.) This movement should be available at a woodworking store, but if not, there are several sources listed at right.

SAW-TOOTH BIT. To create the 3"-dia. opening for the body of the movement, we used a straight bit, a router guide bushing, and a shop-made template. But you can get the job done quicker with a fairly inexpensive Forstner-style bit. *Lee Valley* currently offers a 3" saw-tooth bit (06J01.48), as in the photo below.

POSTERBOARD & FELT. The only other thing needed for the clock is some posterboard and adhesive-backed felt to line the compartment. Both items may be available at a craft store, but the felt can be purchased from mail order sources.

Jewelry Chest-on-Chest

Like the clock, there's not much hardware needed for the jewelry chest-on-chest.

BRASS KNOBS. The $\frac{3}{8}$" x $\frac{3}{8}$" brass knobs are available from *Lee Valley* (00A39.01), but other sources offer small brass knobs as well.

WALNUT PLYWOOD. If you build this chest out of walnut like I did, you'll need $\frac{1}{4}$" walnut plywood for the case backs and drawer bottoms. If you aren't able to find any near you, small pieces of walnut plywood can be ordered through the mail order source at right. (All the parts can be cut from a 24" x 24" piece.)

FINISH & LINING. To finish the project, we used a can of orange shellac that should be available at local hardware stores. Also, just like the clock, we lined the drawers with posterboard and adhesive-backed felt, see the information given in the clock section above.

Online Extras

If you don't have internet access, you can have a copy of this issue's Online Extras mailed to you. Just send a self-addressed, stamped #10 envelope to:

Woodsmith No. 144
Online Extras
P. O. Box 842
Des Moines, IA 50304

MAIL ORDER SOURCES

Similar project supplies may be ordered from the following companies:

Lee Valley
800-871-8158
leevalley.com
Full-extension slides, Bin-style pulls, Felt, 3"-dia. bits, Small brass knobs

McFeely's
800-443-7937
mcfeelys.com
Threaded inserts & drivers, Over-travel & Full-extension slides

Van Dyke's Restorers
800-558-1234
vandykes.com
Threaded inserts, Over-travel & Full-extension slides, Bin-style pulls, Small brass knobs

Rockler
800-279-4441
rockler.com
Threaded inserts & drivers, Over-travel & Full-extension slides, Bin-style pulls, Clock movements, Felt, Small brass knobs, Walnut plywood

Woodsmith Store
800-835-5084
Threaded inserts, Full-extension slides, Small brass knobs

Woodworker's Supply
800-645-9292
woodworker.com
Threaded inserts, Over-travel & Full-extension slides, Bin-style pulls, Clock movements, 3"-dia. bits, Felt, Small brass knobs

WOODSMITH PROJECT SUPPLIES

To order back issues or a hardware kit from *Woodsmith Project Supplies*, please use our Toll-Free order line, see below. It's open Monday through Friday, from 8 AM to 5 PM Central Time. Before calling, please have your VISA, MasterCard, Discover, or American Express card ready.

If you would prefer to mail in an order, please call the Toll-Free phone number below for more information concerning shipping charges as well as any applicable sales tax.

1-800-444-7527

Woodsmith on the web

- "Online Extras" - Plans, Patterns, & More
- Over 100 Woodworking Tips Online
- Visit Our Readers' Project Photo Gallery
- Project Plans You Can Download
- Catalog of Project Kits, Tools, Jigs, & Plans
- Forums for Woodworking, Tools, & Classifieds
- Links to Other Woodworking Sites
- Order *Woodsmith* & *ShopNotes* Back Issues

www.woodsmith.com

Online Customer Service
Click on Subscriber Services at
www.woodsmith.com

- Access your account status
- Change your mailing or email address
- Pay your bill
- Renew your subscription
- Tell us if you've missed an issue
- Find out if your payment has been received

Final Details

Desk Clock. *There's more to this project than just a handsome timepiece. The top of the clock lifts off to reveal a secret compartment. For step-by-step instructions turn to page 20.*

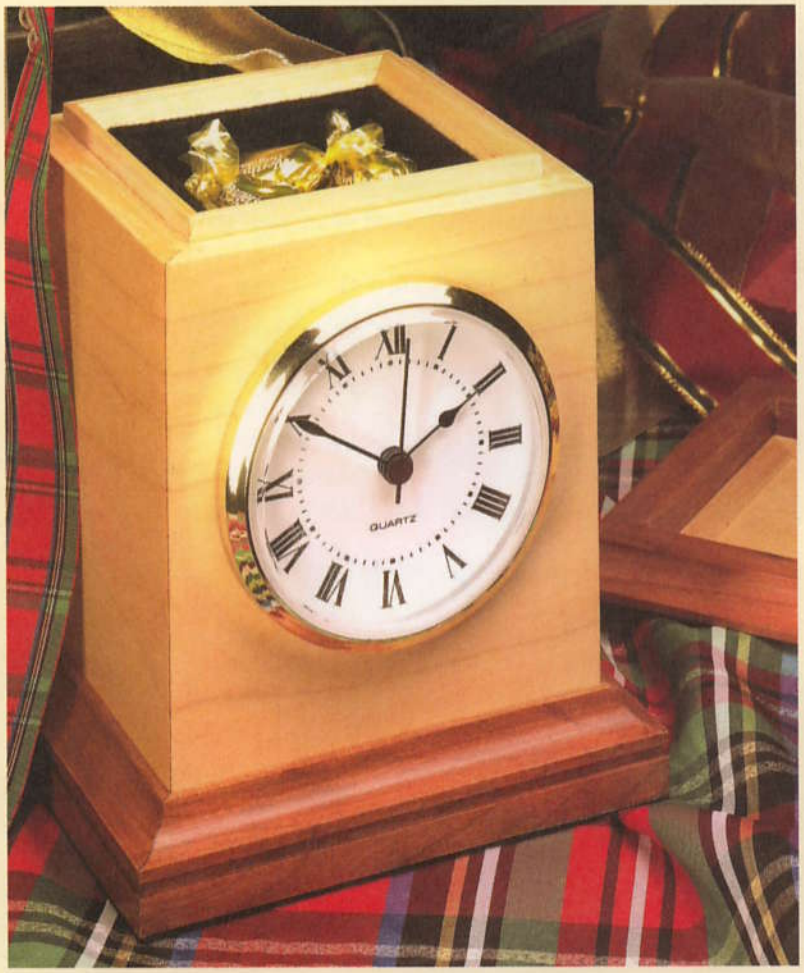

Jewelry Chest-on-Chest. *This small project has a lot of the same features as a full-sized chest-on-chest. But the joinery has been "brought down to size," so it's easier to build. Complete plans for this gift project begin on page 28.*

Modular File Cabinets. *How much storage do you need? With these modular cabinets, you can build just what you need (and even add a drawer or two later). Plus you won't break your back when it's time to move them. Plans begin on page 6.*